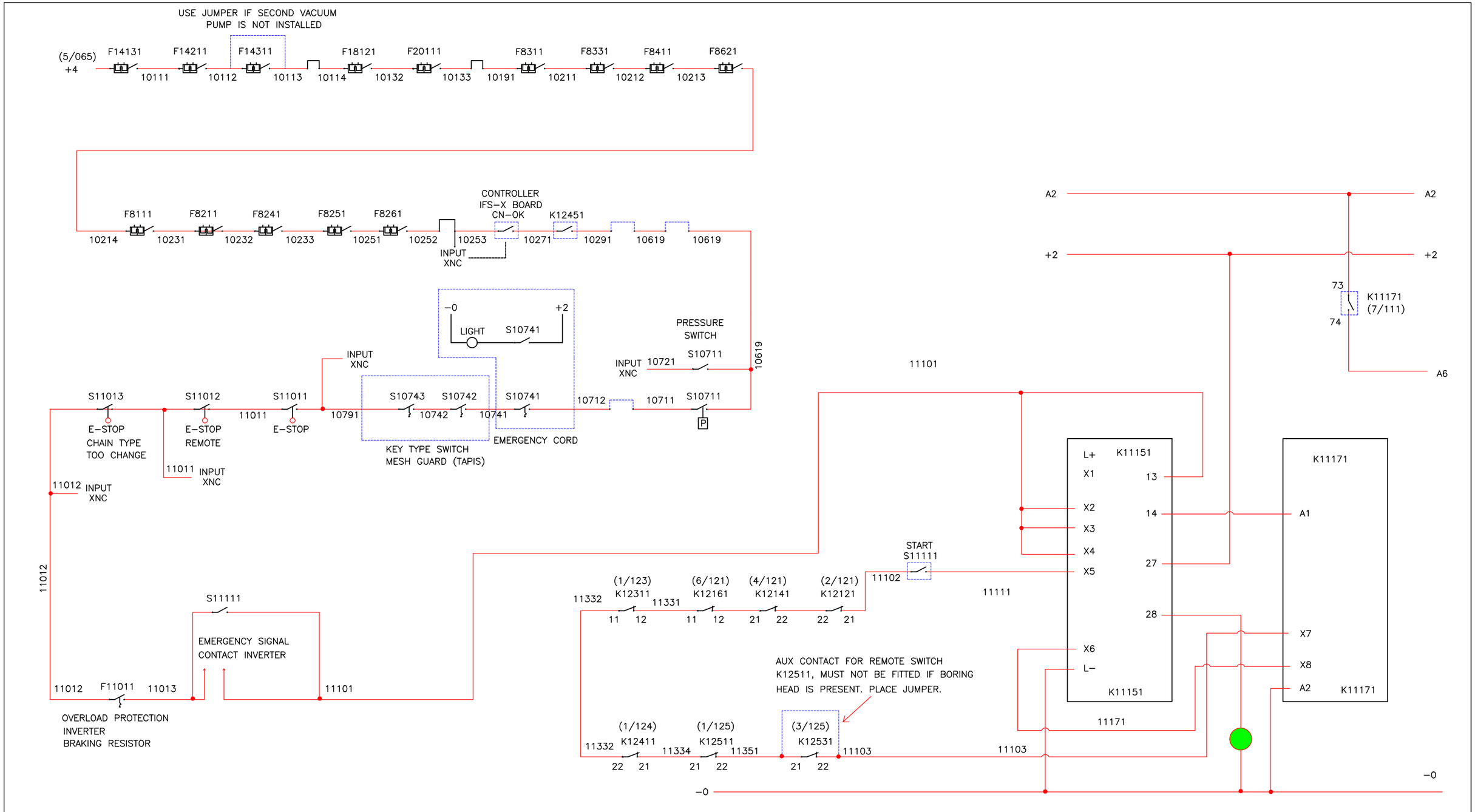

CNC TECHNOLOGIE PRODUCTIONS
50 F ARBOIT, L'ASSOMPTION, J5W 4P5
QUEBEC, CANADA
514 231-6241

MESA CARD ARRANGEMENT
RETROFIT CARD REQUIREMENTS
5I25 — 7I77
7I74
7I70
7I71
7I71

CNCT BIESSE ROVER 30 L2

STARTUP LOGIC

REV.	DATE	DESCRIPTION

ECHELLE: NTS
DESSINE-PAR: BB
VERIFIE-PAR:
APP-PAR:

DATE: FEBRUARY 2017
DESSIN-NUMERO: ROVER-30-ST-LOGIC-1
REV
Page 1 of 1