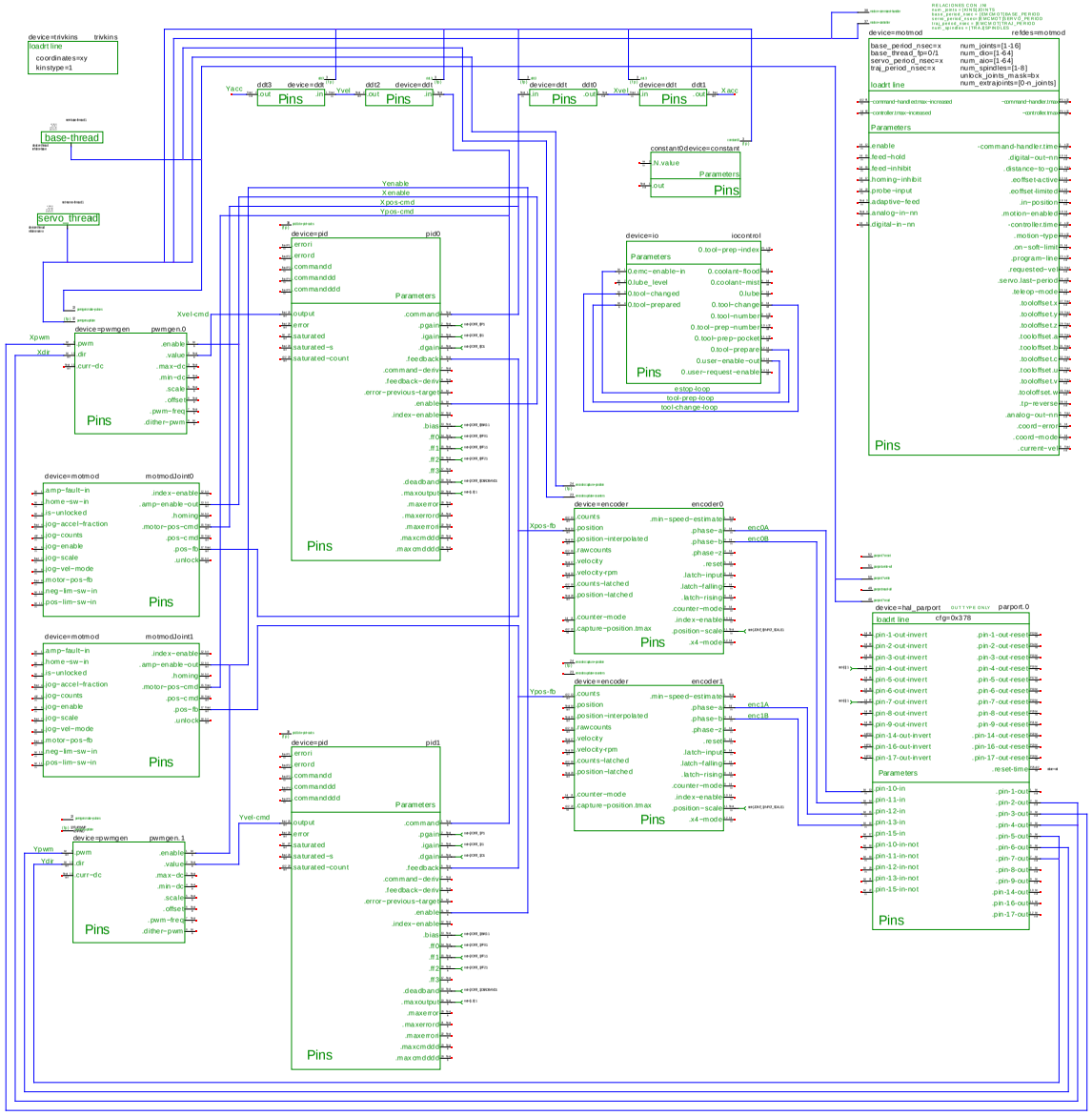
device=trivkins trivkins
loadrt line
coordinates=xy
kinstype=1
base-thread
servo_thread
ddt3 device=ddt
ddt2 device=ddt
device=ddt ddt0
device=ddt ddt1
Yacc
Yvel
Xvel
Xacc
constant0device=constant
N.value
Parameters
out
Pins
Yenable
Xenable
Xpos-cmd
Ypos-cmd
Xvel-cmd
Yvel-cmd
Xpos-fb
Ypos-fb
device=pid pid0
errori
errord
commandd
commanddd
commanddddd
Parameters
output
error
saturated
saturated-s
saturated-count
.command
.pgain
.igain
.dgain
.feedback
.command-deriv
.feedback-deriv
.error-previous-target
.enable
.index-enable
.bias
.ff0
.ff1
.ff2
.ff3
.deadband
.maxoutput
.maxerror
.maxerrori
.maxcmdd
.maxcmdddd
Pins
device=pwmgen pwmgen.0
pwm
dir
curr-dc
.enable
.value
.max-dc
.min-dc
.scale
.offset
.pwm-freq
.dither-pwm
Xpwm
Xdir
device=pwmgen pwmgen.1
Ypwm
Ydir
device=io iocontrol
0.tool-prep-index
0.mc-enable-in
0.lube_level
0.tool-changed
0.tool-prepared
0.coolant-flood
0.coolant-mist
0.lube
0.tool-change
0.tool-number
0.tool-prep-number
0.tool-prep-pocket
0.tool-prepare
0.user-enable-out
0.user-request-enable
estop-loop
tool-prep-loop
tool-change-loop
device=motmod motmodJoint0
amp-fault-in
home-sw-in
is-unlocked
jog-accel-fraction
jog-counts
jog-enable
jog-scale
jog-vel-mode
motor-pos-fb
neg-lim-sw-in
pos-lim-sw-in
index-enable
amp-enable-out
homing
motor-pos-cmd
pos-cmd
pos-fb
unlock
motmodJoint1
device=encoder encoder0
counts
position
position-interpolated
rawcounts
velocity
velocity-rpm
counts-latched
position-latched
counter-mode
capture-position.tmax
.min-speed-estimate
.phase-a
.phase-b
.phase-z
.reset
.latch-input
.latch-falling
.latch-rising
.counter-mode
.index-enable
.position-scale
.x4-mode
enc0A
enc0B
encoder1
enc1A
enc1B
device=motmod motmodJoint1
device=hal_parport parport.0
OUT TYPE ONLY
loadrt line
cfg=0x378
.pin-1-out-invert
.pin-2-out-invert
.pin-3-out-invert
.pin-4-out-invert
.pin-5-out-invert
.pin-6-out-invert
.pin-7-out-invert
.pin-8-out-invert
.pin-9-out-invert
.pin-14-out-invert
.pin-16-out-invert
.pin-17-out-invert
.pin-1-out-reset
.pin-2-out-reset
.pin-3-out-reset
.pin-4-out-reset
.pin-5-out-reset
.pin-6-out-reset
.pin-7-out-reset
.pin-8-out-reset
.pin-9-out-reset
.pin-14-out-reset
.pin-16-out-reset
.pin-17-out-reset
.reset-time
.pin-10-in
.pin-11-in
.pin-12-in
.pin-13-in
.pin-15-in
.pin-10-in-not
.pin-11-in-not
.pin-12-in-not
.pin-13-in-not
.pin-15-in-not
.pin-1-out
.pin-2-out
.pin-3-out
.pin-4-out
.pin-5-out
.pin-6-out
.pin-7-out
.pin-8-out
.pin-9-out
.pin-14-out
.pin-16-out
.pin-17-out
device=motmod refdes=motmod
base_period_nsec=x
base_thread_fp=0/1
servo_period_nsec=x
traj_period_nsec=x
num_joints=[1-16]
num_dio=[1-64]
num_aio=[1-64]
num_spindles=[1-8]
unlock_joints_mask=bx
num_extrajoints=[0-n_joints]
-command-handler.max-increased
-controller.max-increased
-command-handler.max
-controller.max
-command-handler.time
.digital-out-nn
.distance-to-go
.eoffset-active
.eoffset-limited
.in-position
.motion-enabled
-controller.time
.motion-type
.on-soft-limit
.program-line
.requested-vel
.servo.last-period
.teleop-mode
.toloffset.x
.toloffset.y
.toloffset.z
.toloffset.a
.toloffset.b
.toloffset.c
.toloffset.u
.toloffset.v
.toloffset.w
.tp-reverse
.analog-out-nn
.coord-error
.coord-mode
.current-vel
enable
feed-hold
feed-inhibit
homing-inhibit
probe-input
adaptive-feed
analog-in-nn
digital-in-nn

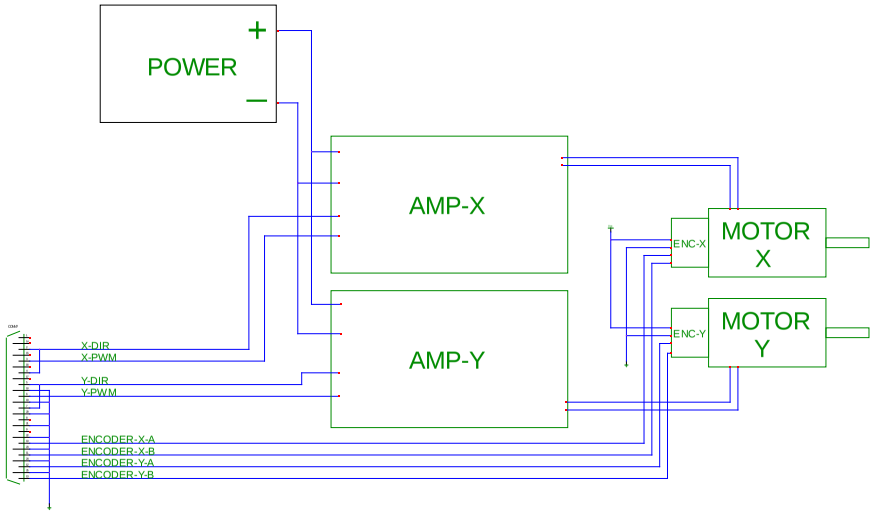
POWER
+
−
AMP-X
AMP-Y
MOTOR X
MOTOR Y
ENC-X
ENC-Y
X-DIR
X-PWM
Y-DIR
Y-PWM
ENCODER-X-A
ENCODER-X-B
ENCODER-Y-A
ENCODER-Y-B