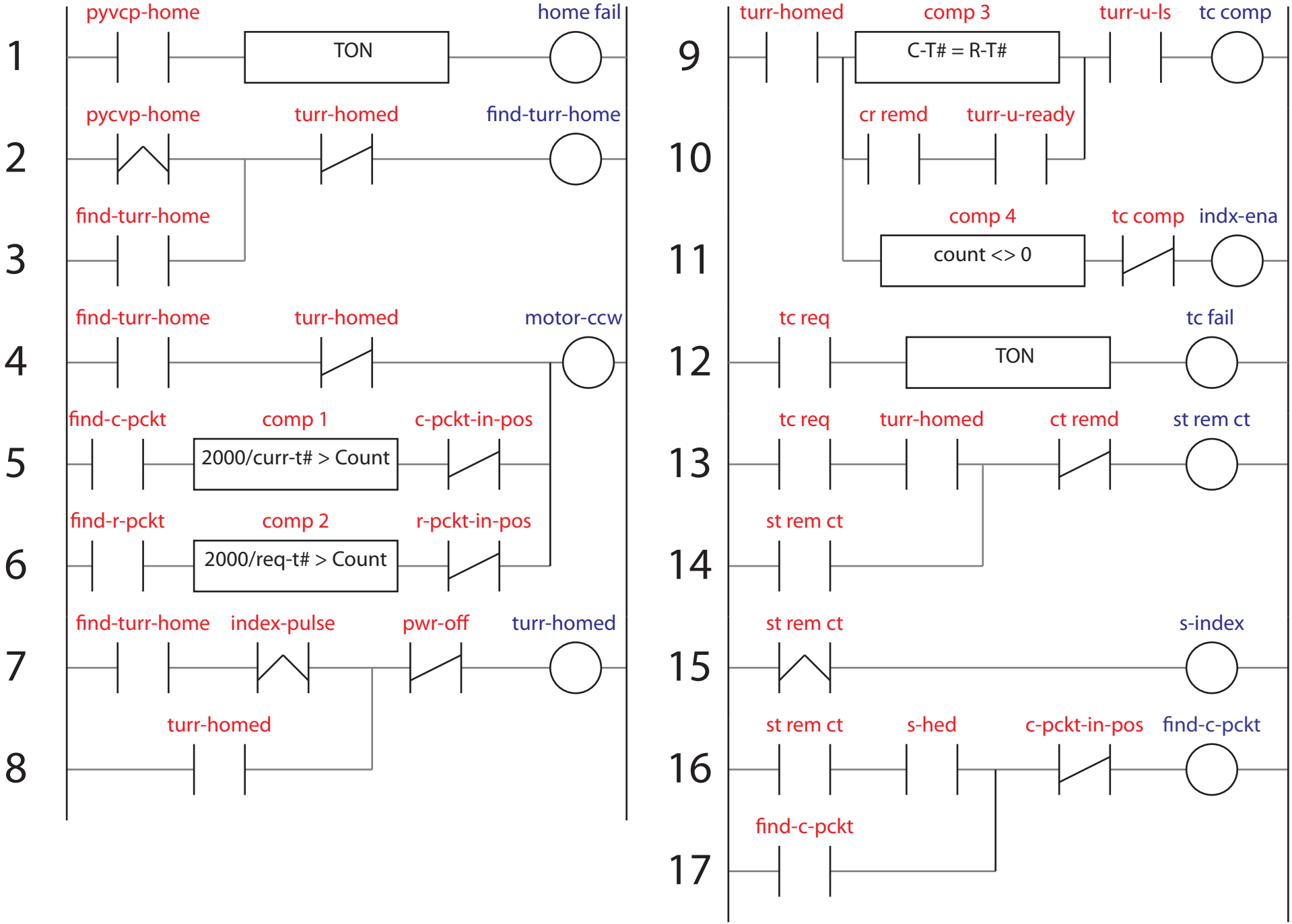
1
pyvcp-home
TON
home fail
2
pycvp-home
turr-homed
find-turr-home
3
find-turr-home
4
find-turr-home
turr-homed
motor-ccw
5
find-c-pckt
comp 1
2000/curr-t# > Count
c-pckt-in-pos
6
find-r-pckt
comp 2
2000/req-t# > Count
r-pckt-in-pos
7
find-turr-home
index-pulse
pwr-off
turr-homed
8
turr-homed
9
turr-homed
comp 3
C-T# = R-T#
turr-u-ls
tc comp
10
cr remd
turr-u-ready
11
comp 4
count <> 0
tc comp
indx-ena
12
tc req
TON
tc fail
13
tc req
turr-homed
ct remd
st rem ct
14
st rem ct
15
st rem ct
s-index
16
st rem ct
s-hed
c-pckt-in-pos
find-c-pckt
17
find-c-pckt

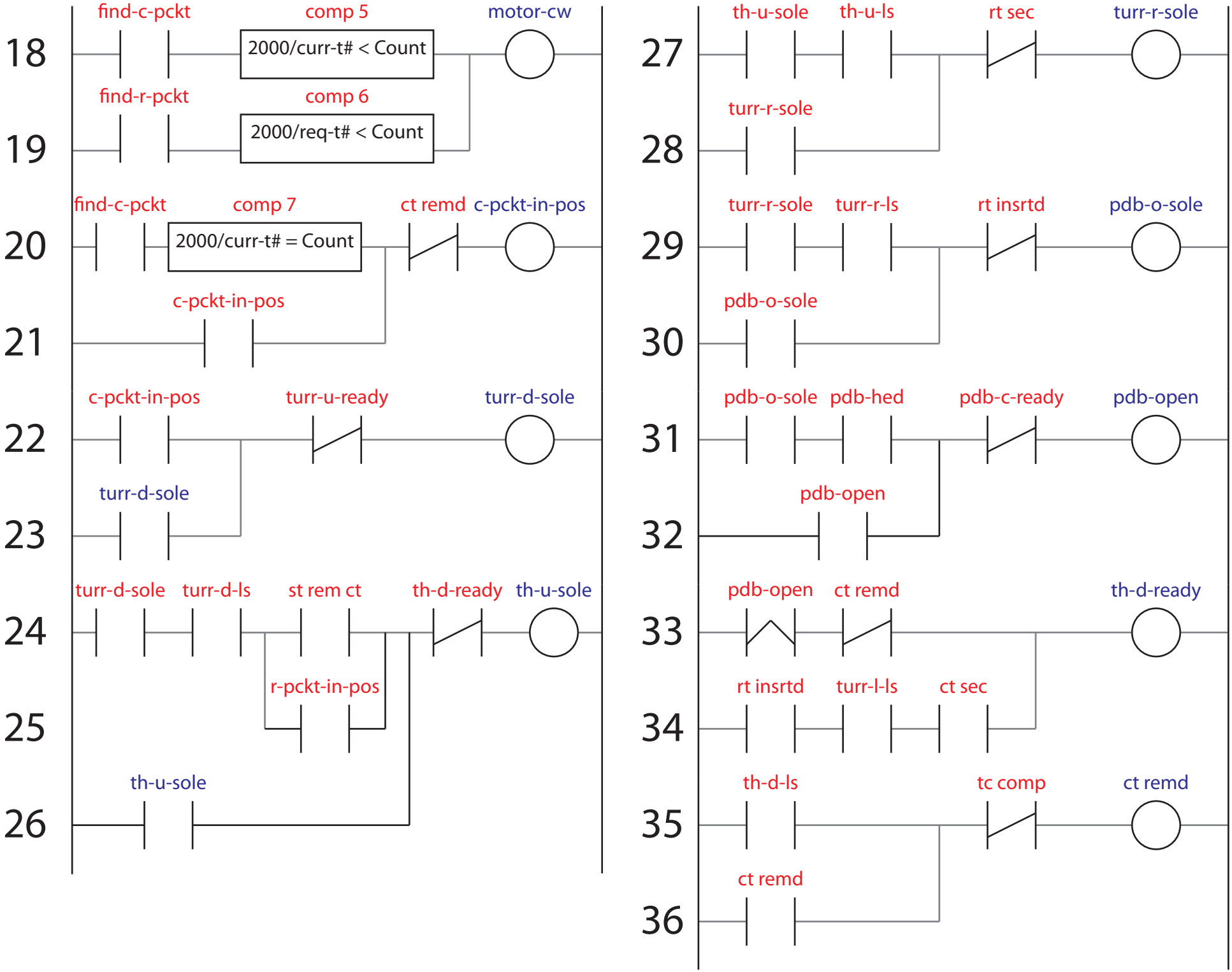
18
find-c-pckt
comp 5
2000/curr-t# < Count
motor-cw
19
find-r-pckt
comp 6
2000/req-t# < Count
20
find-c-pckt
comp 7
2000/curr-t# = Count
ct remd
c-pckt-in-pos
21
c-pckt-in-pos
22
c-pckt-in-pos
turr-u-ready
turr-d-sole
23
turr-d-sole
24
turr-d-sole
turr-d-ls
st rem ct
th-d-ready
th-u-sole
25
r-pckt-in-pos
26
th-u-sole
27
th-u-sole
th-u-ls
rt sec
turr-r-sole
28
turr-r-sole
29
turr-r-sole
turr-r-ls
rt insrtd
pdb-o-sole
30
pdb-o-sole
31
pdb-o-sole
pdb-hed
pdb-c-ready
pdb-open
32
pdb-open
33
pdb-open
ct remd
th-d-ready
34
rt insrtd
turr-l-ls
ct sec
35
th-d-ls
tc comp
ct remd
36
ct remd

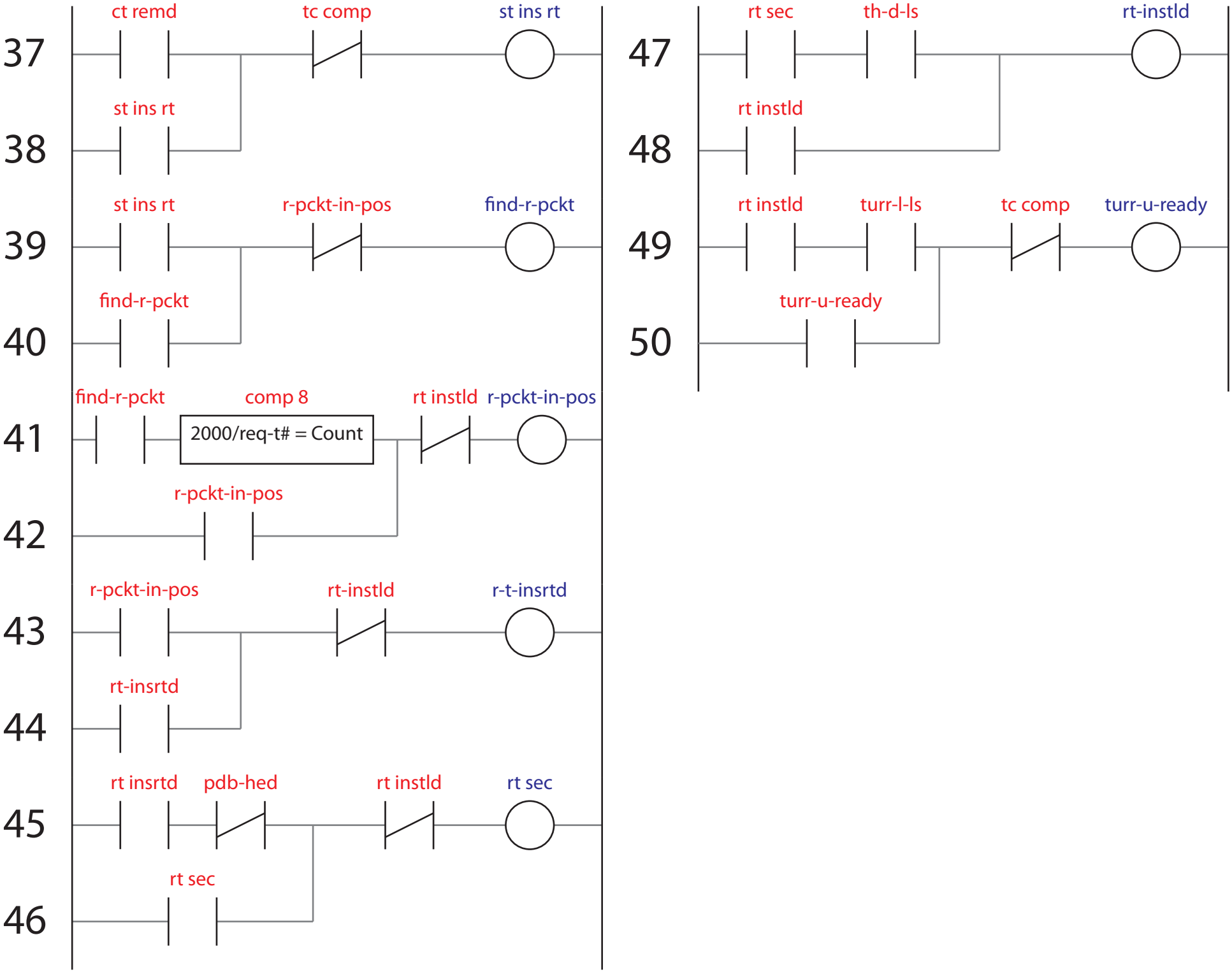
37
ct remd
tc comp
st ins rt
38
st ins rt
39
st ins rt
r-pckt-in-pos
find-r-pckt
40
find-r-pckt
41
find-r-pckt
comp 8
2000/req-t# = Count
rt instld
r-pckt-in-pos
42
r-pckt-in-pos
43
r-pckt-in-pos
rt-instld
r-t-insrtd
44
rt-insrtd
45
rt insrtd
pdb-hed
rt instld
rt sec
46
rt sec
47
rt sec
th-d-ls
rt-instld
48
rt instld
49
rt instld
turr-l-ls
tc comp
turr-u-ready
50
turr-u-ready