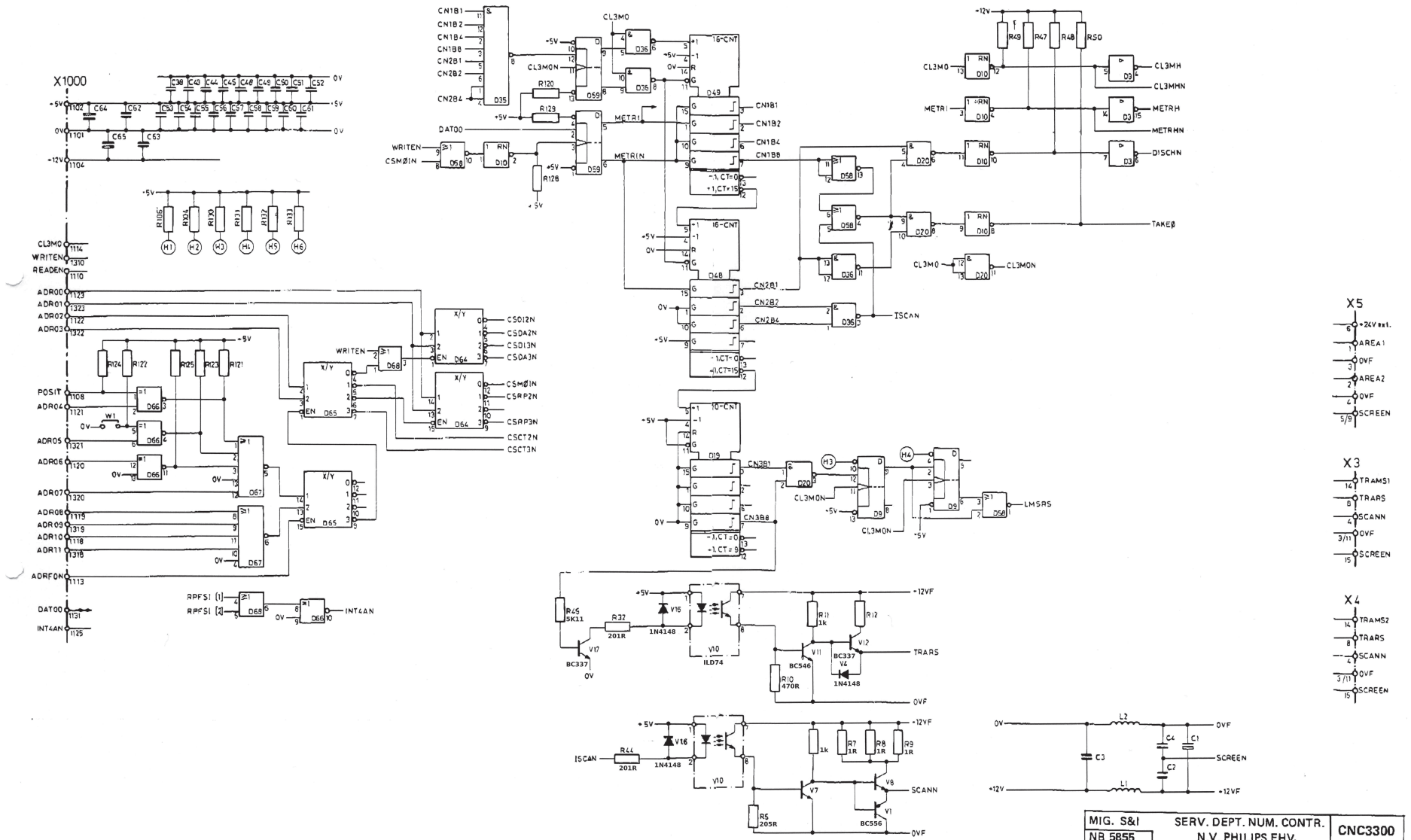
X1000
CL3MO
WRITEN
READEN
ADR00
ADR01
ADR02
ADR03
POSIT
ADR04
ADR05
ADR06
ADR07
ADR08
ADR09
ADR10
ADR11
ADRFON
DAT00
INT4AN
CSD12N
CSDA2N
CSD13N
CSDA3N
CSMØIN
CSRP2N
CSRP3N
CSCT2N
CSCT3N
RPFS1 (1)
RPFS1 (2)
CN1B1
CN1B2
CN1B4
CN1B8
CN2B1
CN2B2
CN2B4
CN3B8
CSMØIN
METRI
METRIN
16-CNT
10-CNT
CL3MH
CL3MHN
METRH
METRHN
DISCHN
TAKEØ
CL3MON
ISCAN
LMSRS
TRARS
SCANN
X5
+24V ext.
AREA1
AREA2
SCREEN
X3
TRAMS1
X4
TRAMS2
MIG. S&I
NB 5855
820503
821027
SERV. DEPT. NUM. CONTR.
N.V. PHILIPS EHV.
CNC3300
LM/RM DRIVE MOD.
SHEET
6 OF 8