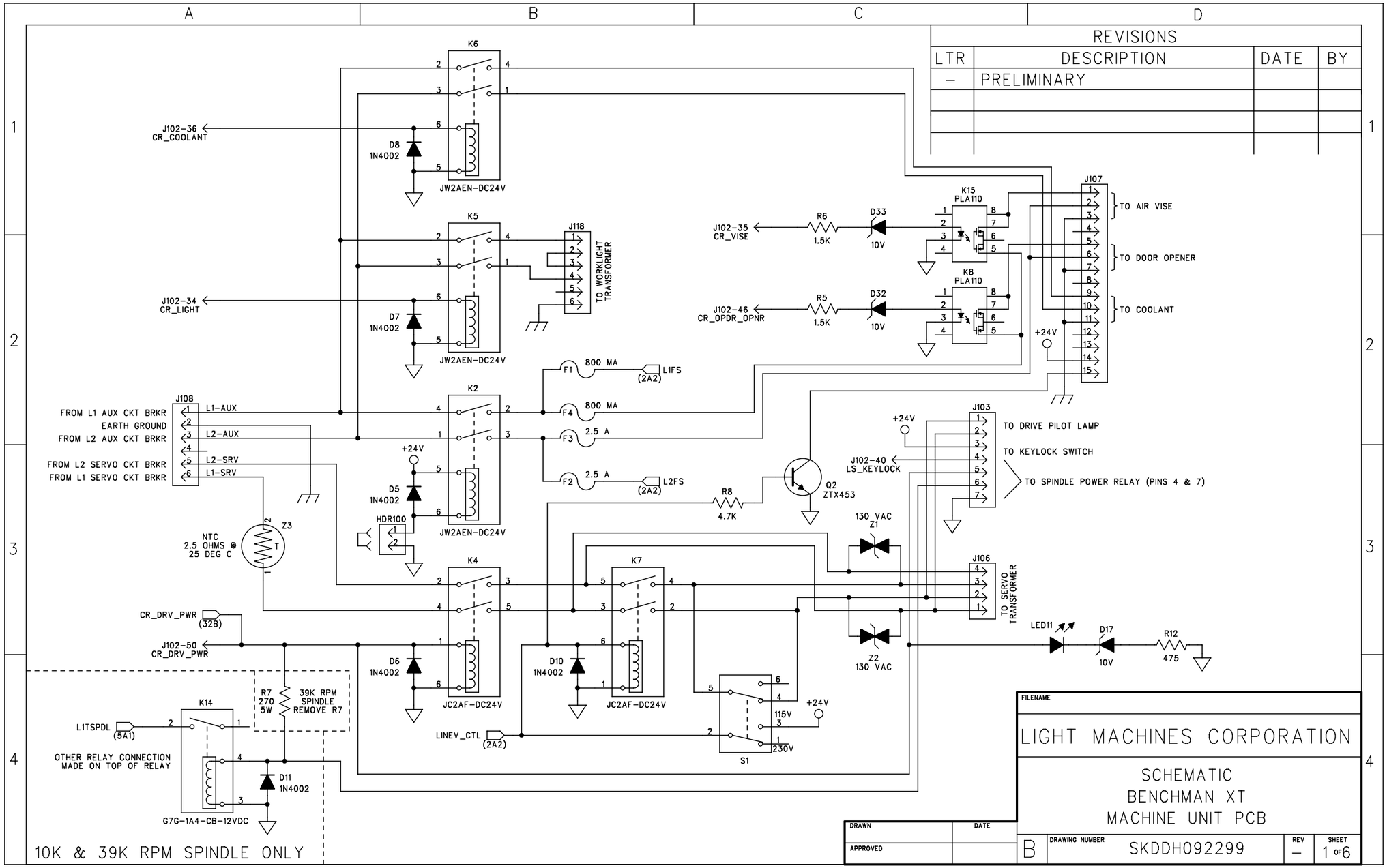
A
B
C
D
REVISIONS
LTR
DESCRIPTION
DATE
BY
–
PRELIMINARY
K6
J102-36
CR_COOLANT
D8
1N4002
JW2AEN-DC24V
K5
J118
TO WORKLIGHT TRANSFORMER
J102-34
CR_LIGHT
D7
1N4002
JW2AEN-DC24V
K2
F1
800 MA
L1FS
(2A2)
F4
800 MA
F3
2.5 A
F2
2.5 A
L2FS
(2A2)
J108
FROM L1 AUX CKT BRKR
EARTH GROUND
FROM L2 AUX CKT BRKR
FROM L2 SERVO CKT BRKR
FROM L1 SERVO CKT BRKR
L1-AUX
L2-AUX
L2-SRV
L1-SRV
+24V
D5
1N4002
HDR100
JW2AEN-DC24V
NTC
2.5 OHMS @
25 DEG C
Z3
K4
CR_DRV_PWR
(32B)
J102-50
CR_DRV_PWR
D6
1N4002
JC2AF-DC24V
K7
D10
1N4002
JC2AF-DC24V
LINEV_CTL
(2A2)
S1
115V
230V
+24V
R7
270
5W
39K RPM
SPINDLE
REMOVE R7
K14
L1TSPDL
(5A1)
OTHER RELAY CONNECTION
MADE ON TOP OF RELAY
D11
1N4002
G7G-1A4-CB-12VDC
10K & 39K RPM SPINDLE ONLY
J102-35
CR_VISE
R6
1.5K
D33
10V
K15
PLA110
J102-46
CR_OPDR_OPNR
R5
1.5K
D32
10V
K8
PLA110
J107
TO AIR VISE
TO DOOR OPENER
TO COOLANT
+24V
J103
TO DRIVE PILOT LAMP
TO KEYLOCK SWITCH
TO SPINDLE POWER RELAY (PINS 4 & 7)
J102-40
LS_KEYLOCK
Q2
ZTX453
R8
4.7K
130 VAC
Z1
Z2
130 VAC
J106
TO SERVO TRANSFORMER
LED11
D17
10V
R12
475
FILENAME
LIGHT MACHINES CORPORATION
SCHEMATIC
BENCHMAN XT
MACHINE UNIT PCB
DRAWN
DATE
APPROVED
B
DRAWING NUMBER
SKDDH092299
REV
–
SHEET
1 OF 6

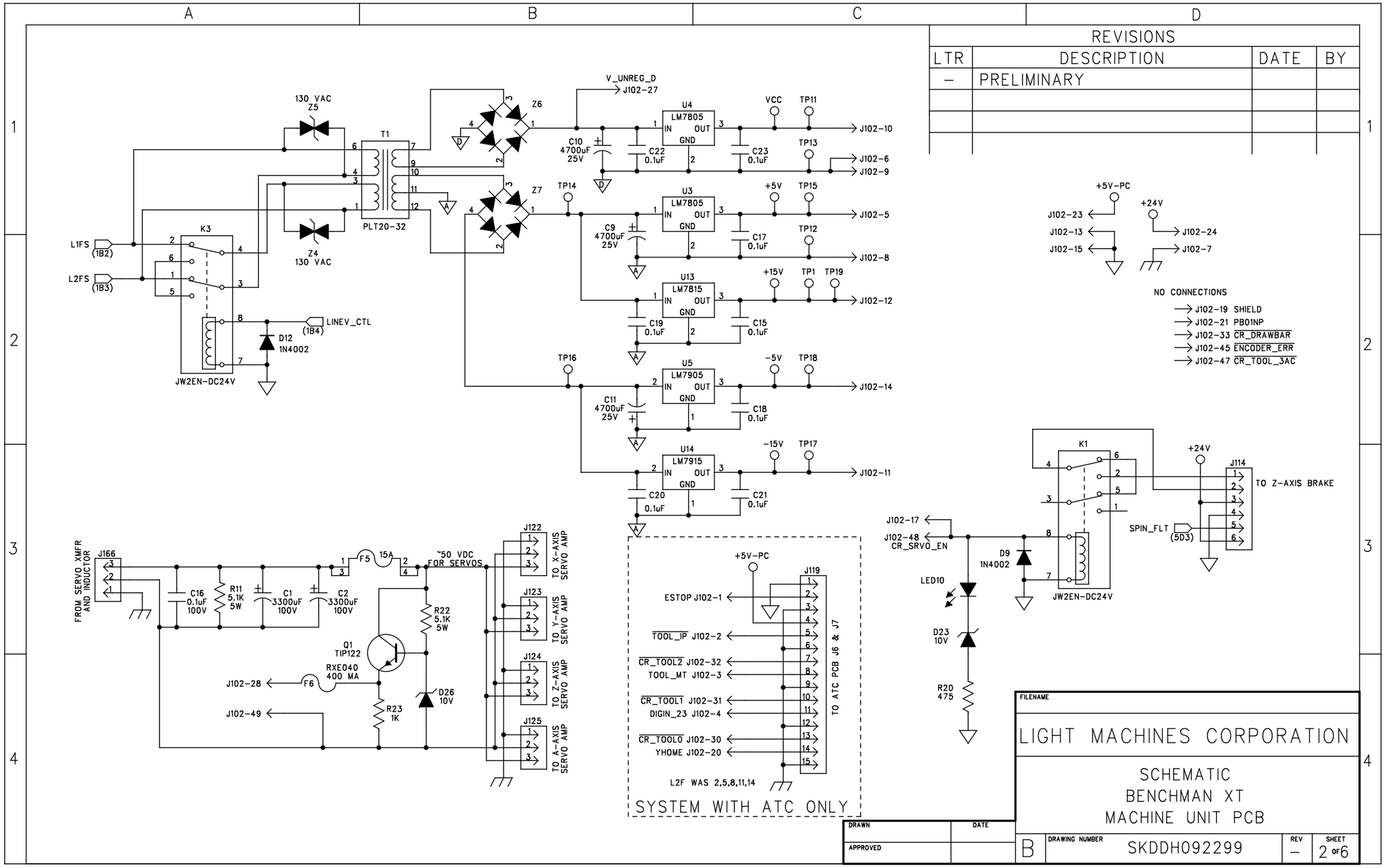
A
B
C
D
1
2
3
4
130 VAC
Z5
T1
PLT20-32
Z4
130 VAC
K3
JW2EN-DC24V
L1FS
(1B2)
L2FS
(1B3)
LINEV_CTL
(1B4)
D12
1N4002
Z6
Z7
V_UNREG_D
J102-27
U4
LM7805
IN
OUT
GND
U3
LM7805
U13
LM7815
U5
LM7905
U14
LM7915
C10
4700uF
25V
C9
4700uF
25V
C11
4700uF
25V
C22
0.1uF
C23
0.1uF
C17
0.1uF
C19
0.1uF
C15
0.1uF
C18
0.1uF
C20
0.1uF
C21
0.1uF
TP14
TP16
VCC
TP11
TP13
+5V
TP15
TP12
+15V
TP1
TP19
-5V
TP18
-15V
TP17
J102-10
J102-6
J102-9
J102-5
J102-8
J102-12
J102-14
J102-11
+5V-PC
+24V
J102-23
J102-13
J102-15
J102-24
J102-7
NO CONNECTIONS
J102-19 SHIELD
J102-21 PB01NP
J102-33 CR_DRAWBAR
J102-45 ENCODER_ERR
J102-47 CR_TOOL_3AC
K1
J114
TO Z-AXIS BRAKE
J102-17
J102-48
CR_SRVO_EN
D9
1N4002
LED10
D23
10V
R20
475
SPIN_FLT
(5D3)
FROM SERVO XMFR
AND INDUCTOR
J166
C16
0.1uF
100V
R11
5.1K
5W
C1
3300uF
100V
C2
3300uF
100V
F5
15A
~50 VDC
FOR SERVOS
R22
5.1K
5W
Q1
TIP122
RXE040
400 MA
F6
J102-28
J102-49
R23
1K
D26
10V
J122
TO X-AXIS
SERVO AMP
J123
TO Y-AXIS
SERVO AMP
J124
TO Z-AXIS
SERVO AMP
J125
TO A-AXIS
SERVO AMP
+5V-PC
J119
ESTOP J102-1
TOOL_IP J102-2
CR_TOOL2 J102-32
TOOL_MT J102-3
CR_TOOL1 J102-31
DIGIN_23 J102-4
CR_TOOL0 J102-30
YHOME J102-20
L2F WAS 2,5,8,11,14
TO ATC PCB J6 & J7
SYSTEM WITH ATC ONLY
REVISIONS
LTR
DESCRIPTION
DATE
BY
–
PRELIMINARY
FILENAME
LIGHT MACHINES CORPORATION
SCHEMATIC
BENCHMAN XT
MACHINE UNIT PCB
DRAWN
DATE
APPROVED
B
DRAWING NUMBER
SKDDH092299
REV
–
SHEET
2 OF 6

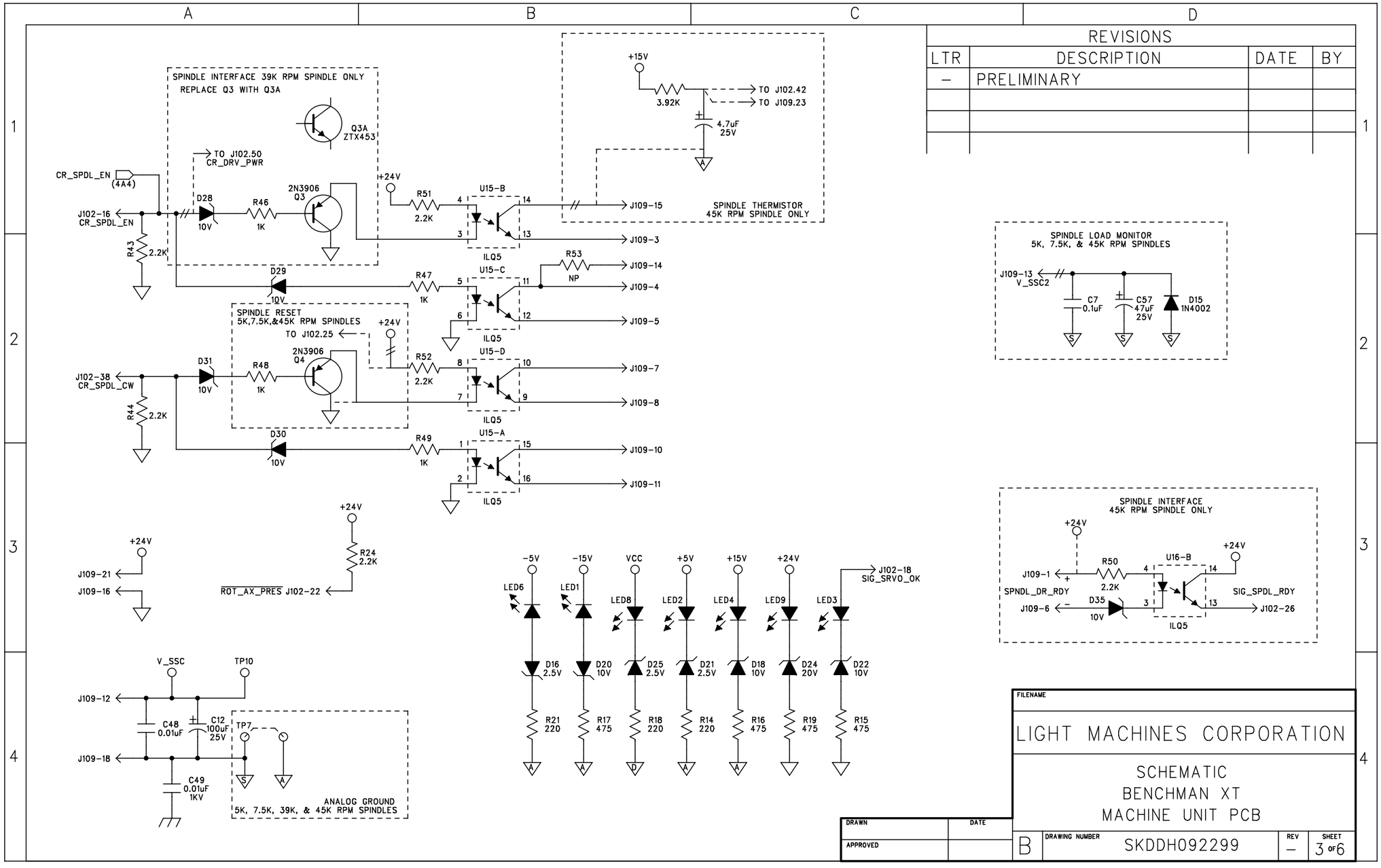

REVISIONS			
LTR	DESCRIPTION	DATE	BY
–	PRELIMINARY		

FILENAME

LIGHT MACHINES CORPORATION

SCHEMATIC
BENCHMAN XT
MACHINE UNIT PCB

DRAWN	DATE				
APPROVED		B	DRAWING NUMBER SKDDH092299	REV –	SHEET 3 OF 6

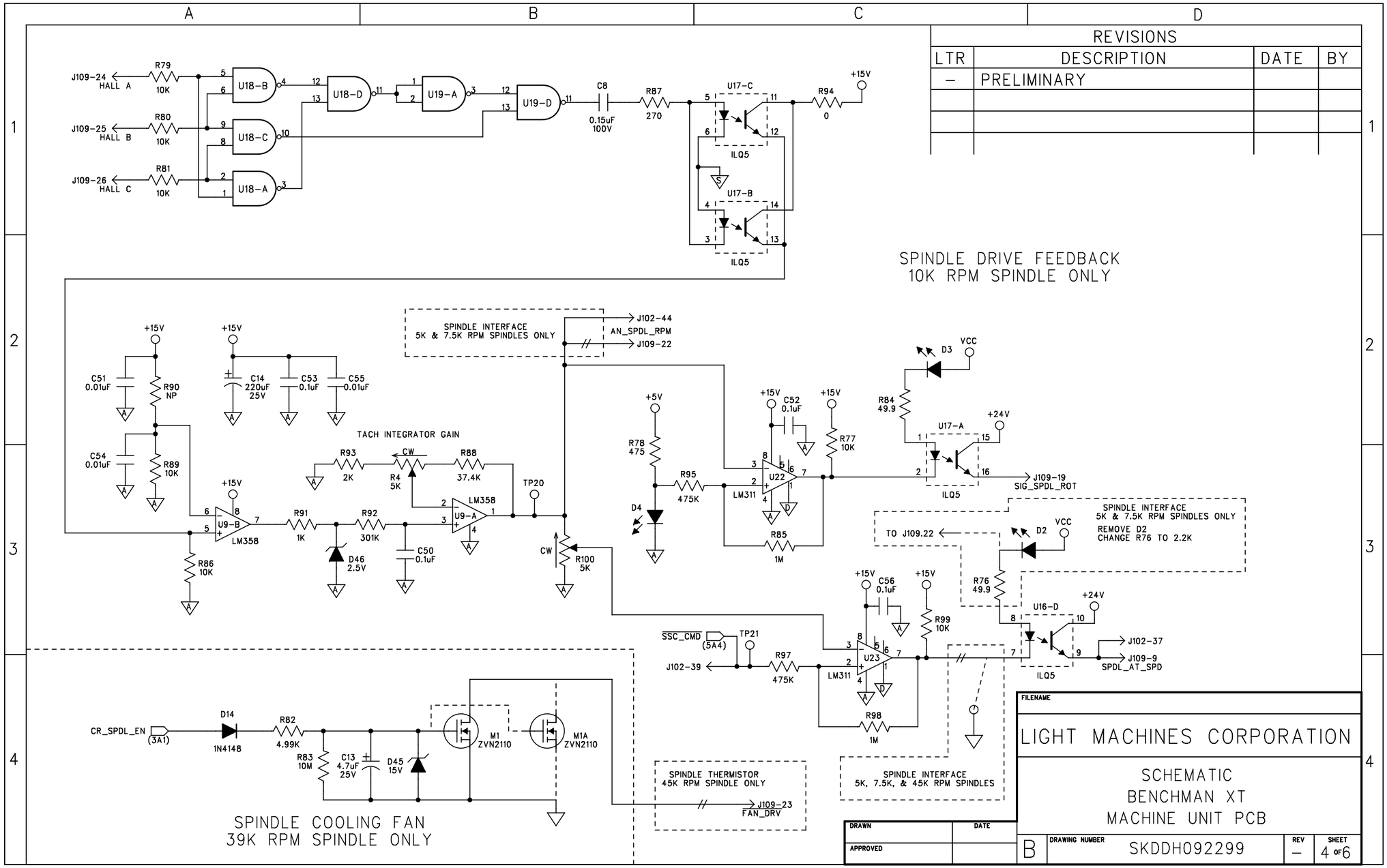
A
B
C
D
1
2
3
4
J109-24
HALL A
R79
10K
J109-25
HALL B
R80
10K
J109-26
HALL C
R81
10K
U18-B
U18-C
U18-A
U18-D
U19-A
U19-D
C8
0.15uF
100V
R87
270
U17-C
U17-B
ILQ5
R94
0
+15V
SPINDLE DRIVE FEEDBACK
10K RPM SPINDLE ONLY
SPINDLE INTERFACE
5K & 7.5K RPM SPINDLES ONLY
J102-44
AN_SPDL_RPM
J109-22
C51
0.01uF
R90
NP
C54
0.01uF
R89
10K
C14
220uF
25V
C53
0.1uF
C55
0.01uF
TACH INTEGRATOR GAIN
R93
2K
CW
R4
5K
R88
37.4K
TP20
U9-B
LM358
U9-A
R91
1K
R92
301K
D46
2.5V
C50
0.1uF
R86
10K
CW
R100
5K
+5V
R78
475
D4
R95
475K
C52
0.1uF
U22
LM311
R77
10K
R85
1M
D3
VCC
R84
49.9
U17-A
+24V
J109-19
SIG_SPDL_ROT
SPINDLE INTERFACE
5K & 7.5K RPM SPINDLES ONLY
REMOVE D2
CHANGE R76 TO 2.2K
TO J109.22
D2
R76
49.9
C56
0.1uF
R99
10K
U16-D
J102-37
J109-9
SPDL_AT_SPD
SSC_CMD
(5A4)
TP21
J102-39
R97
475K
U23
LM311
R98
1M
CR_SPDL_EN
(3A1)
D14
1N4148
R82
4.99K
R83
10M
C13
4.7uF
25V
D45
15V
M1
ZVN2110
M1A
ZVN2110
SPINDLE COOLING FAN
39K RPM SPINDLE ONLY
SPINDLE THERMISTOR
45K RPM SPINDLE ONLY
J109-23
FAN_DRV
SPINDLE INTERFACE
5K, 7.5K, & 45K RPM SPINDLES
REVISIONS
LTR
DESCRIPTION
DATE
BY
–
PRELIMINARY
FILENAME
LIGHT MACHINES CORPORATION
SCHEMATIC
BENCHMAN XT
MACHINE UNIT PCB
DRAWN
DATE
APPROVED
B
DRAWING NUMBER
SKDDH092299
REV
–
SHEET
4 OF 6

REVISIONS			
LTR	DESCRIPTION	DATE	BY
–	PRELIMINARY		

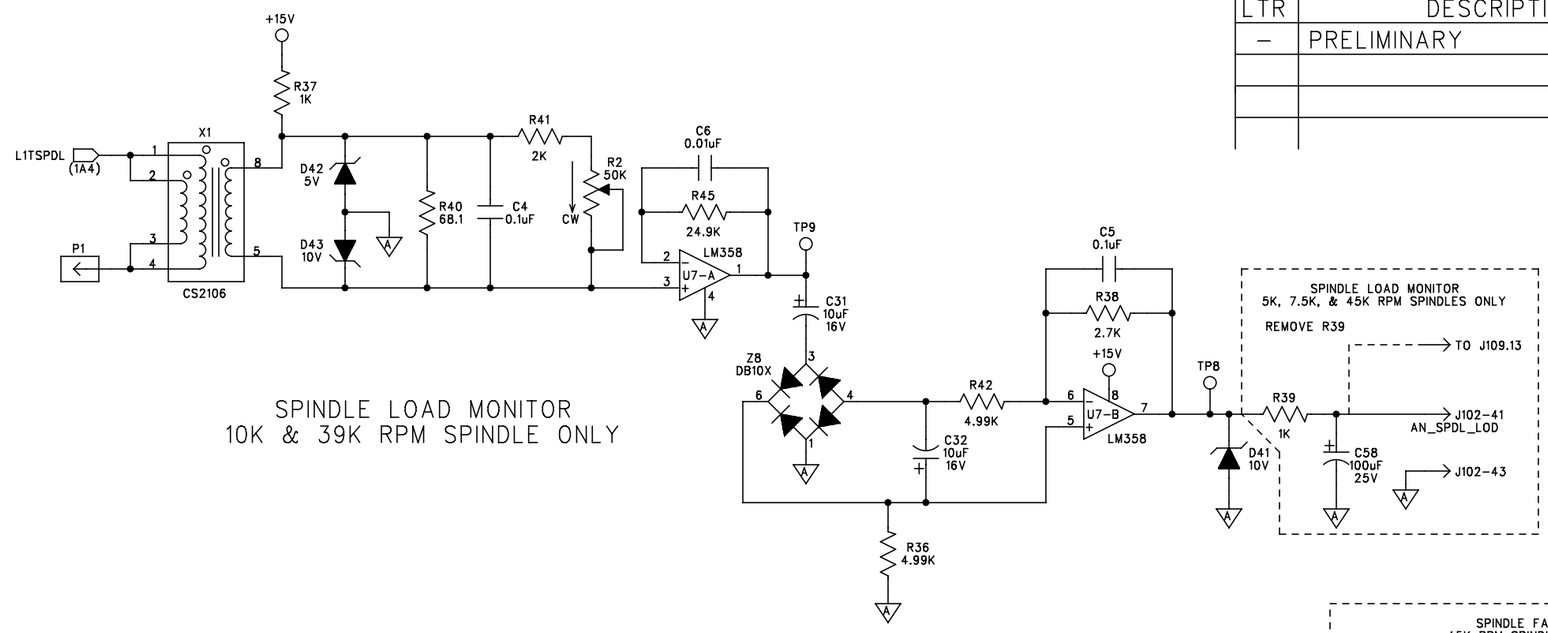

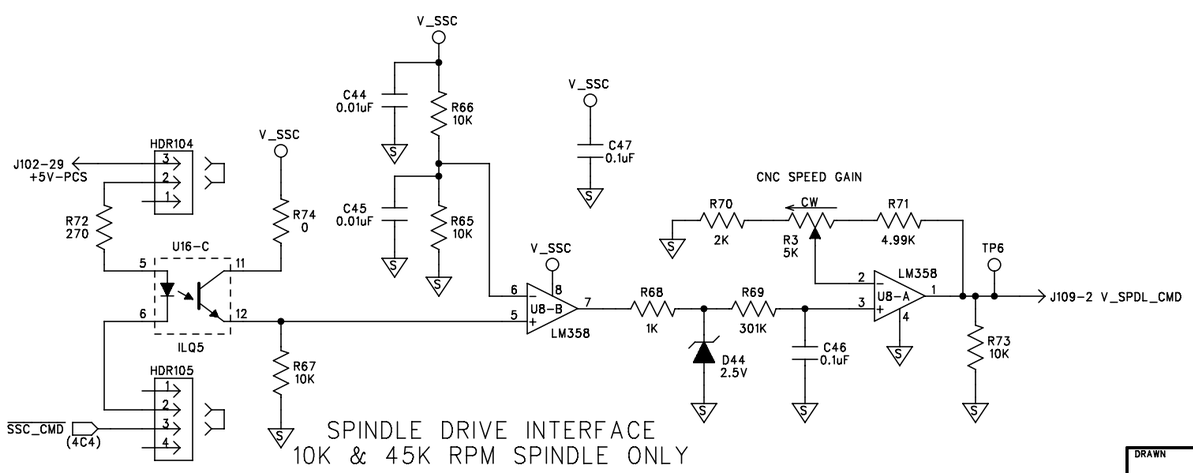

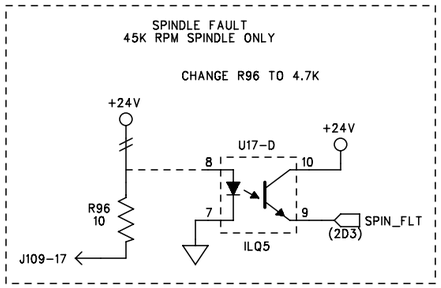

DRAWN	DATE	FILENAME	
APPROVED		LIGHT MACHINES CORPORATION	
		SCHEMATIC BENCHMAN XT MACHINE UNIT PCB	
		B — DRAWING NUMBER SKDDH092299	REV – / SHEET 5 OF 6

CONNECTOR PIN	SIGNAL NAME	SCHEMATIC LOCATION
J102-1	ESTOP	2C3
J102-2	TOOL_IP	2C3
J102-3	TOOL_MT	2C4
J102-4	DIGIN_23	2C4
J102-5	+5V	2C1
J102-6	GND_D	2C1
J102-7	GND_CHASSIS	2D2
J102-8	GND_A	2C2
J102-9	GND_D	2C1
J102-10	VCC	2C1
J102-11	-15V	2C3
J102-12	+15V	2C2
J102-13	GND	2D2
J102-14	-5V	2D2
J102-15	GND	2D2
J102-16	CR_SPDL_EN	3A1
J102-17	CR_SRVO_EN	2C3
J102-18	SIG_SRVO_OK	3C3
J102-19	SHIELD	2D2
J102-20	YHOME	2C4
J102-21	PB01NP	2D2
J102-22	ROT_AX_PRES	3A3
J102-23	+5V-PC	2D1
J102-24	+24V	2D1
J102-25		
J102-26	SIG_SPDL_RDY	3B4
J102-27	V_UNREG_D	2B1
J102-28		2A4
J102-29	+5V-PCS	5A3
J102-30	CR_TOOL0	2C4
J102-31	CR_TOOL1	2C4
J102-32	CR_TOOL2	2C4
J102-33	CR_DRAWBAR	2D2
J102-34	CR_LIGHT	1A2
J102-35	CR_VISE	1C1
J102-36	CR_COOLANT	1A1
J102-37	SPDL_AT_SPD	4D3
J102-38	CR_SPDL_CW	3A2
J102-39	SSC_CMD	4B4
J102-40	LS_KEYLOCK	1C3
J102-41	AN_SPDL_LOD	5D2
J102-42		3C1
J102-43	GND_A	5D2
J102-44	AN_SPDL_RPM	4B2
J102-45	ENCODER_ERR	2D2
J102-46	CR_OPDP_OPNR	1C2
J102-47	CR_TOOL_3AC	2D2
J102-48	CR_SRVO_EN	2C3
J102-49		2A4
J102-50	CR_DRV_PWR	1A3
J109-1	SPNDL_DR_RDY+	3D3
J109-2	V_SPDL_CMD	5C4
J109-3	E1	3B2
J109-4	C2	3B2
J109-5	E2	3B2
J109-6	SPNDL_DR_RDY-	3A4
J109-7	C3	3B2
J109-8	E3	3B2
J109-9	SPDL_AT_SPD	4D3
J109-10	C4	3B2
J109-11	E4	3B2
J109-12	V_SSC	3A4
J109-13	V_SSC2	3B4
J109-14	R_C2	3B2
J109-15	C1	3B2
J109-16	GND	3A3
J109-17		5D3
J109-18	GND_SSC	3A4
J109-19	SIG_SPDL_ROT	4C3
J109-20		
J109-21	+24V	3A3
J109-22	AN_SPDL_RPM	4B2
J109-23	FAN_DRV	4B4
J109-24	HALLA	4A1
J109-25	HALLB	4A1
J109-26	HALLC	4A1

TEST POINT / LED FUNCTIONALITY

TP1: +15VDC (REF TO GND_A)
TP2:
TP3:
TP4:
TP5:
TP6: V_SPDL_CMD
TP7: GND_SSC
TP8: SPINDLE LOAD (ANALOG)
TP9: SPINDLE LOAD (PRE-SHAPED)
TP10: V_SSC (REF TO GND_SSC)
TP11: +5VDC (REF TO GND_D)
TP12: GND_A
TP13: GND_D
TP14: V+ANALOG (REF TO GND_A)
TP15: +5VDC (REF TO GND_A)
TP16: V-ANALOG (REF TO GND_A)
TP17: -15VDC (REF TO GND_A)
TP18: -5VDC (REF TO GND_A)
TP19: +15VDC (REF TO GND_A)
TP20: AN_SPDL_RPM
TP21: SSC_CMD

D1: DO NOT POPULATE
D2: SPINDLE AT SPEED } ONLY ON 10K RPM SPINDLE
D3: SPINDLE ROTATING } ONLY ON 10K RPM SPINDLE
D4: +5V

LED1: -15V
LED2: +5V
LED3: SIG_SRVO_OK
LED4: +15V
LED5: DO NOT POPULATE
LED6: -5V
LED7: DOES NOT EXIST
LED8: VCC
LED9: +24V
LED10: CR_SRVO_EN
LED11: CR_DRV_PWR (NEXTMOVE INTERNAL RELAY)

5K RPM SPINDLE USES ELECTROCRAFT SPINDLE CONTROL
7.5K RPM SPINDLE USES ELECTROCRAFT SPINDLE CONTROL
10K RPM SPINDLE USES MINAREC SPEED CONTROL
39KRPM SPINDLE USES SEIMENS SPEED CONTROL
45K RPM SPINDLE USES EMS SPEED CONTROL

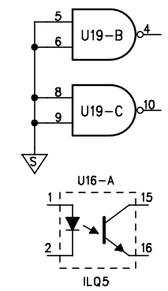

SPARES

REVISIONS

LTR	DESCRIPTION	DATE	BY
–	PRELIMINARY		

FILENAME

LIGHT MACHINES CORPORATION

SCHEMATIC NOTES
BENCHMAN XT
MACHINE UNIT PCB

DRAWN | DATE
APPROVED

B | DRAWING NUMBER SKDDH092299 | REV – | SHEET 6 OF 6