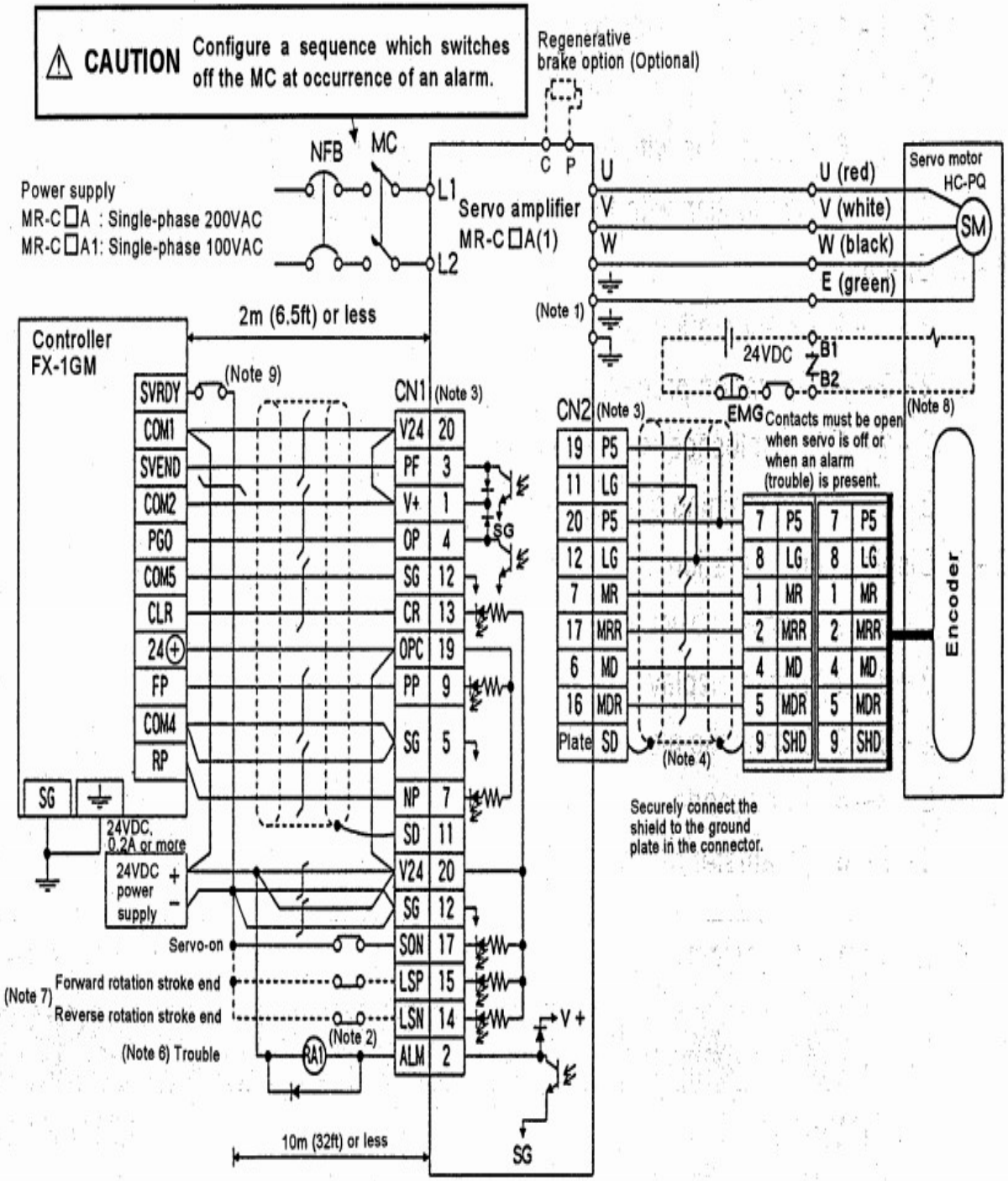2-1-1 Connection with the FX-1GM