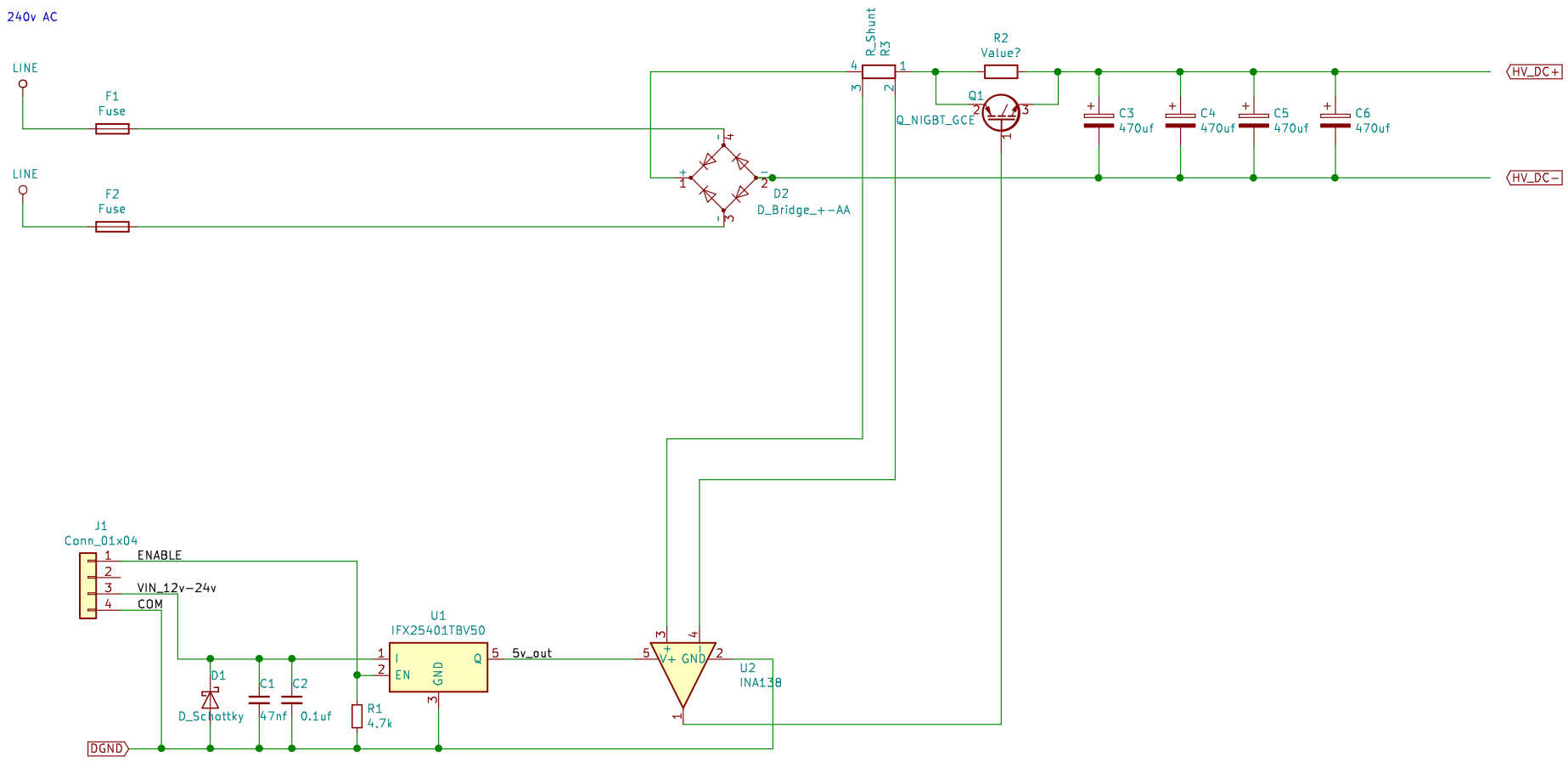
240v AC
LINE
F1
Fuse
LINE
F2
Fuse
D2
D_Bridge_+-AA
R_Shunt
R3
R2
Value?
Q1
Q_NIGBT_GCE
C3
470uf
C4
470uf
C5
470uf
C6
470uf
HV_DC+
HV_DC-
J1
Conn_01x04
ENABLE
VIN_12v-24v
COM
U1
IFX25401TBV50
I
EN
GND
Q
5v_out
D1
D_Schottky
C1
47nf
C2
0.1uf
R1
4.7k
U2
INA138
V+
GND
DGND