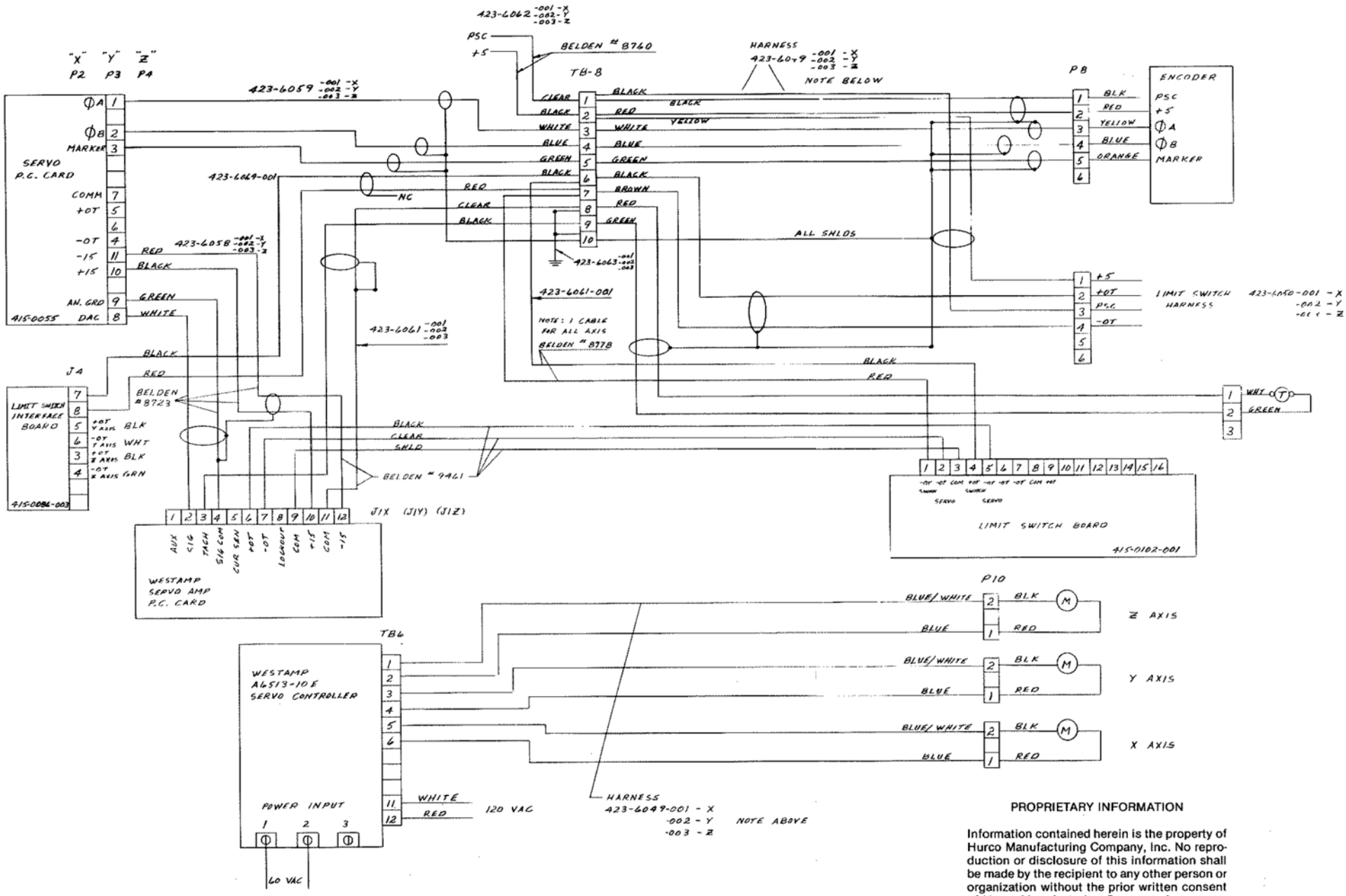

PROPRIETARY INFORMATION

Information contained herein is the property of Hurco Manufacturing Company, Inc. No reproduction or disclosure of this information shall be made by the recipient to any other person or organization without the prior written consent of Hurco Manufacturing Company, Inc.