ID: CBL200
Location: 7I76, P1, IDC26
ID: CBL201
Location: 7I76, P2, IDC26

Location: 7I77, P1 Host
Location: 7I74, P1 Host

1,IO0	1,IO0
2,IO2	2,IO2
3,IO4	3,IO4
4,IO6	4,IO6
5,IO8	5,IO8
6,IO9	6,IO9
7,IO10	7,IO10
8,IO11	8,IO11
9,IO12	9,IO12
10,IO13	10,IO13
11,IO14	11,IO14
12,IO15	12,IO15
13,IO16	13,IO16
14,IO1	14,IO1
15,IO3	15,IO3
16,IO5	16,IO5
17,IO7	17,IO7
18,GND	18,GND
19,GND	19,GND
20,GND	20,GND
21,GND	21,GND
22,GND or 5V	22,GND or 5V
23,GND or 5V	23,GND or 5V
24,GND or 5V	24,GND or 5V
25,GND or 5V	25,GND or 5V

Unit: Ethernet Switch
- ETH, Ethernet, RJ45
- ETH, Ethernet, RJ45
- ETH, Ethernet, RJ45
- ETH, Ethernet, RJ45

Unit: Moition Controller
Type: PC
ID: 001
- ETH, Ethernet, RJ45
- ETH, Ethernet, RJ45

Unit: Master
Model: 7I76E
Function: Daughter Board Step Dir
- P1, Expansion, IDC26
- P2, Expansion, IDC26
- TB3, RS422, Terminals
- ETH, Ethernet, RJ45

Ethernet
RS422

7I70
DI 48x

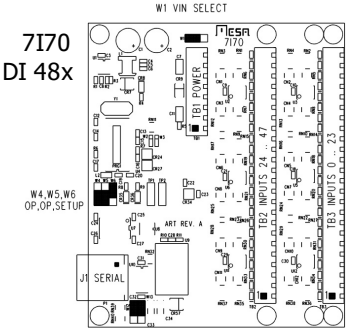

7I74

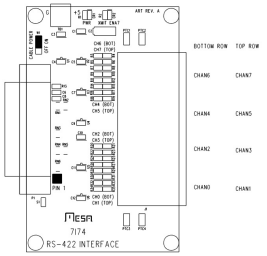

7I71
DO 48x

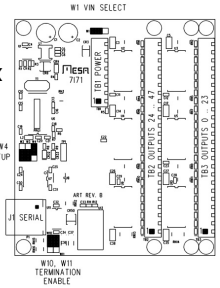

CBL201??

CBL200??

Unit: Comms
Model: 7I74
Function: Daughter Board, Comms
- P1, Expansion, DB25
- CH00, RS422/485, RJ45
- CH01, RS422/485, RJ45
- CH02, RS422/485, RJ45
- CH03, RS422/485, RJ45
- CH04, RS422/485, RJ45
- CH05, RS422/485, RJ45
- CH06, RS422/485, RJ45
- CH07, RS422/485, RJ45

Unit: Remote IO
Model: 7I70
Function: Daughter Board IO, DI
- J1, RS422, RJ45

Function: DI 48

Unit: Remote IO
Model: 7I77
Function: Daughter Board IO
- P1, Host, DB25
- TB6, RS422, Term

Encoders 6x, DI 32, DO 16, AO 6

Unit: Remote IO
Model: 7I70
Function: Daughter Board IO, DI
- J1, RS422, RJ45

Function: DI 48

7I77

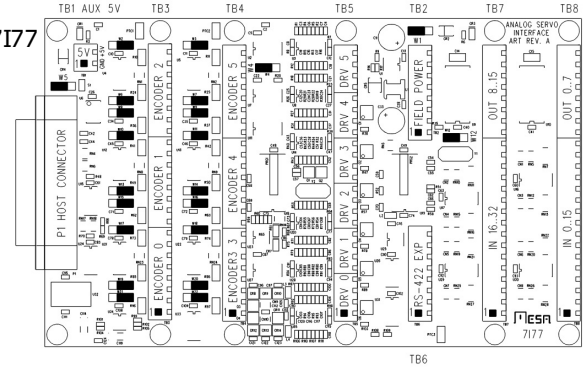

Unit: Remote IO
Model: 7I71
Function: Daughter Board IO, DO
- J1, RS422, RJ45

Function: DO 48

Unit: Remote IO
Model: 7I71
Function: Daughter Board IO, DO
- J1, RS422, RJ45

Function: DO 48

7I76E

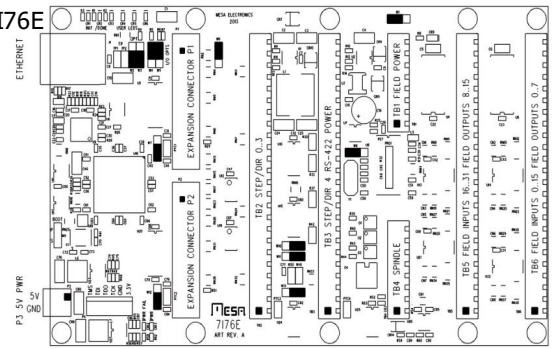

				DATE				
				DSGN	Trevor (ATL)			
1	Dev01	2020/03/10	TK	CHKD				
REV	MOD	DATE	INIT	APPD		Service 1	System	Electrical Control Systems

Mesa LinuxCNC
Various
None
Proj N°:
Next:: --
Page: 20