ID: CBL200

Location: 7I76, P1, IDC26 — Location: 7I77, P1 Host

1,IO0	1,IO0
2,IO2	2,IO2
3,IO4	3,IO4
4,IO6	4,IO6
5,IO8	5,IO8
6,IO9	6,IO9
7,IO10	7,IO10
8,IO11	8,IO11
9,IO12	9,IO12
10,IO13	10,IO13
11,IO14	11,IO14
12,IO15	12,IO15
13,IO16	13,IO16
14,IO1	14,IO1
15,IO3	15,IO3
16,IO5	16,IO5
17,IO7	17,IO7
18,GND	18,GND
19,GND	19,GND
20,GND	20,GND
21,GND	21,GND
22,GND or 5V	22,GND or 5V
23,GND or 5V	23,GND or 5V
24,GND or 5V	24,GND or 5V
25,GND or 5V	25,GND or 5V

Unit: Moition Controller
Type: PC
ID: 001

ETH, Ethernet, RJ45

Unit: Ethernet Switch

ETH, Ethernet, RJ45
ETH, Ethernet, RJ45
ETH, Ethernet, RJ45
ETH, Ethernet, RJ45

Unit: Master

Model: 7I76E

Function: Daughter Board Step Dr

P1, Expansion, IDC26
P2, Expansion, IDC26
TB3, RS422, Terminals
ETH, Ethernet, RJ45

Ethernet
RS422

CBL200??

Unit: Comms

Model: 7I74

Function: Daughter Board, Comms

P1, Expansion, DB25

CH00, RS422/485, RJ45
CH01, RS422/485, RJ45
CH02, RS422/485, RJ45
CH03, RS422/485, RJ45
CH04, RS422/485, RJ45
CH05, RS422/485, RJ45
CH06, RS422/485, RJ45
CH07, RS422/485, RJ45

Unit: Remote IO

Model: 7I70

Function: Daughter Board IO, DI

J1, RS422, RJ45

Function: DI 48

Unit: Remote IO

Model: 7I77

Function: Daughter Board IO

P1, Host, DB25
TB6, RS422, Term

Encoders 6x, DI 32, DO 16, AO 6

Unit: Remote IO

Model: 7I70

Function: Daughter Board IO, DI

J1, RS422, RJ45

Function: DI 48

Unit: Remote IO

Model: 7I71

Function: Daughter Board IO, DO

J1, RS422, RJ45

Function: DO 48

Unit: Remote IO

Model: 7I71

Function: Daughter Board IO, DO

J1, RS422, RJ45

Function: DO 48

7I70
DI 48x

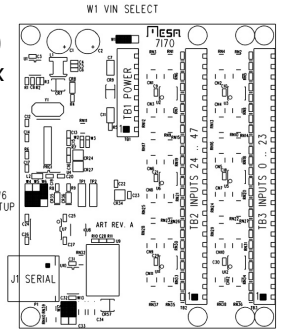

7I74

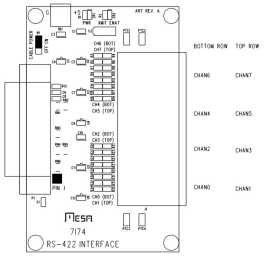

7I71
DO 48x

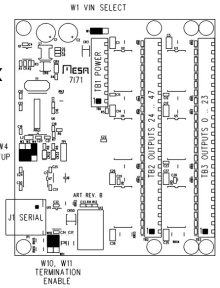

7I77

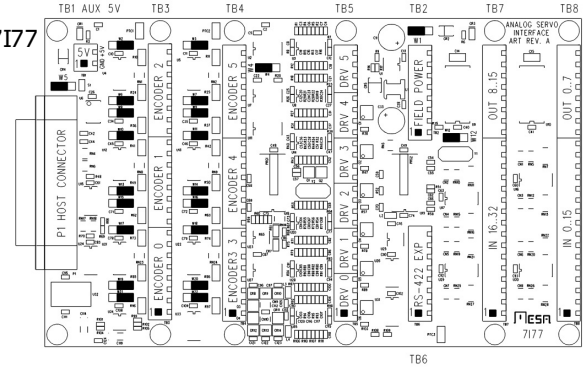

7I76E

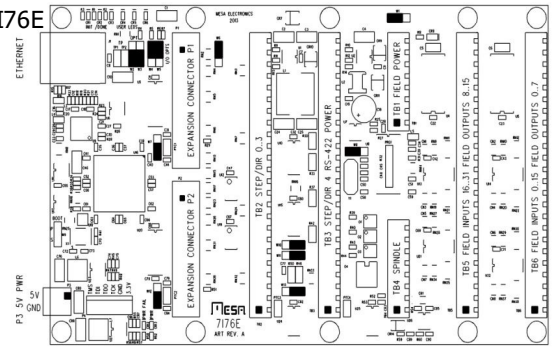

				DATE				
				DSGN	Trevor (ATL)			
1	Dev01	2020/03/10	TK	CHKD				
REV	MOD	DATE	INIT	APPD		Service 1	System	Electrical Control Systems

Mesa LinuxCNC

Proj N°:

Next:: --

Page: 20

Various

None