Config sample lines from hal file:

loadrt hostmot2

loadrt hm2_eth board_ip="192.168.1.121" config="num_encoders=1 num_pwmgens=0 num_stepgens=3 sserial_port_0=21xxxxxx"

Notes:

board_ip="192.168.1.121"	The default IP address of the 7i76e Its suggested to use the 10.10.10.10 IP address for LinuxCNC so you don't end up with the real time Ethernet IP address range, overlapping a DHCP pool of local network addresses. (set W3 up instead of down to use 10.10.10.10)
num_encoders=1	see man hostmot2 for additional details
num_pwmgens=0	see man hostmot2 for additional details
num_stepgens=3	see man hostmot2 for additional details
sserial_port_0=21xxxxxx	The first digit (2) selects the software mode from the 7i76e itself, The second digit (1) selects the software mode of the connected SSerial device i.e. the 7i73

7i76e supports 3 Software modes:

MODE 0	I/O only mode (32 bits of input data, 16 bit of output data)
MODE 1	I/O plus analog input mode (32 bits of input data, 16 bits of output data, 4analog input channels)
MODE 2	I/O plus analog input and field voltage and MPG mode 32 bits of input data, 16 bits of output data, 4 analog input channels, field voltage analog in, and 2 MPG encoders on inputs 16..19. Default encoder count mode is 1X to match normal 100 ppr MPG's.

To PC

Do not connect

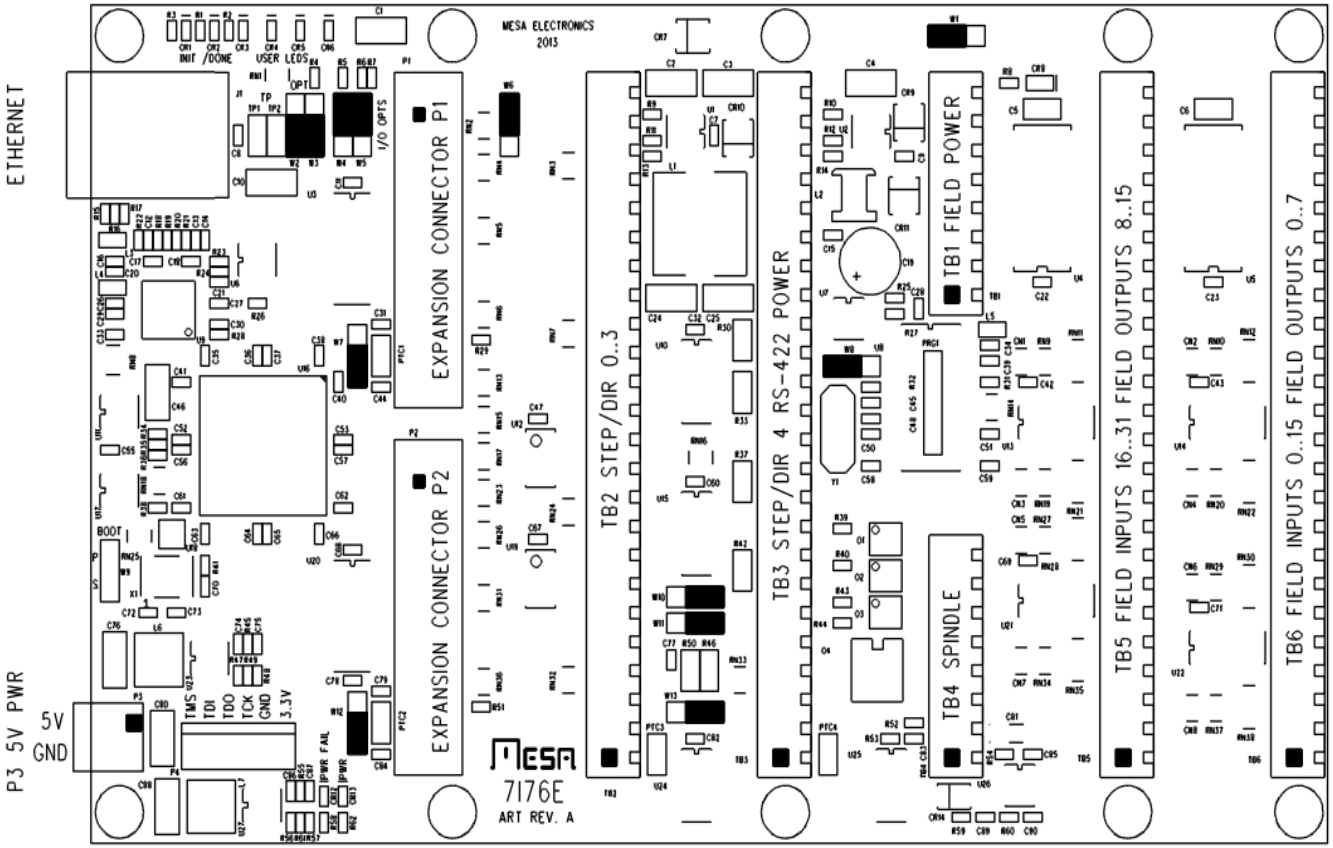

Jumpers:

W1	: left	(default)
W2	: down	(default)
W3	: down	(default) *
W4	: up	(default)
W5	: up	(default)
W6	: up	(default)
W7	: down	(default)
W8	: left	(default)
W9	: up	(default)
W10	: left	(default)
W11	: left	(default)
W12	: down	(default)
W13	: left	(default)

* Its suggested to use the 10.10.10.10 IP address for LinuxCNC so you don't end up with the real time Ethernet IP address range, overlapping a DHCP pool of local network addresses. (set W3 up instead of down to use 10.10.10.10)

Power Connections

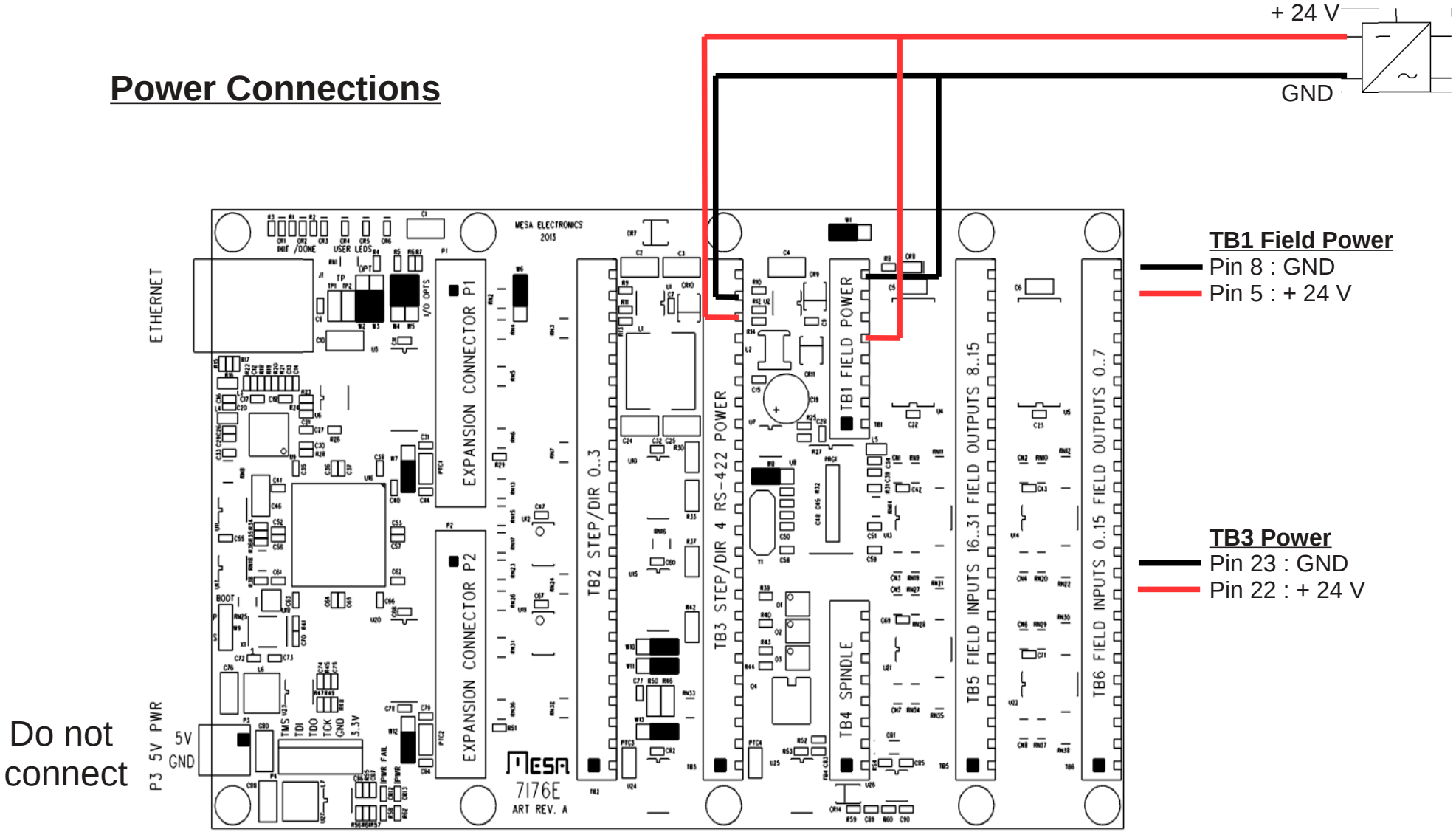

Connection to SSerial device, i.e. 7i73

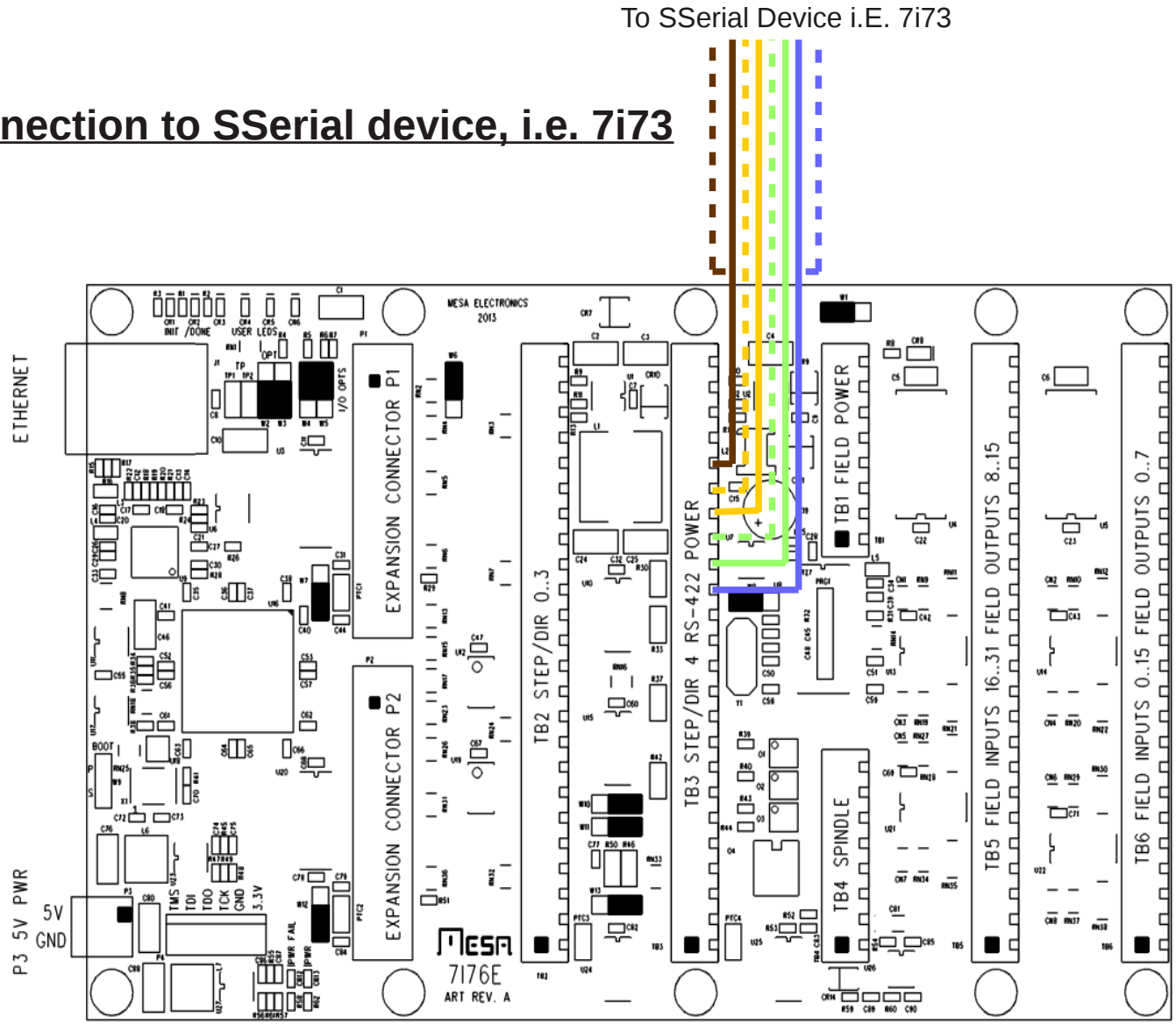

TB3 SSerial

- Pin 20 : Brown and Brown/White
- Pin 19 : Orange/White
- Pin 18 : Orange
- Pin 17 : Green/White
- Pin 16 : Green
- Pin 15 : Blue and Blue/White

Colors correspond to
Standard CAT 5 or
CAT 6 network cable
If wired according T568B
Just cut one end

For details see:
https://en.wikipedia.org/wiki/TIA/EIA-568

Connection of Analog Input

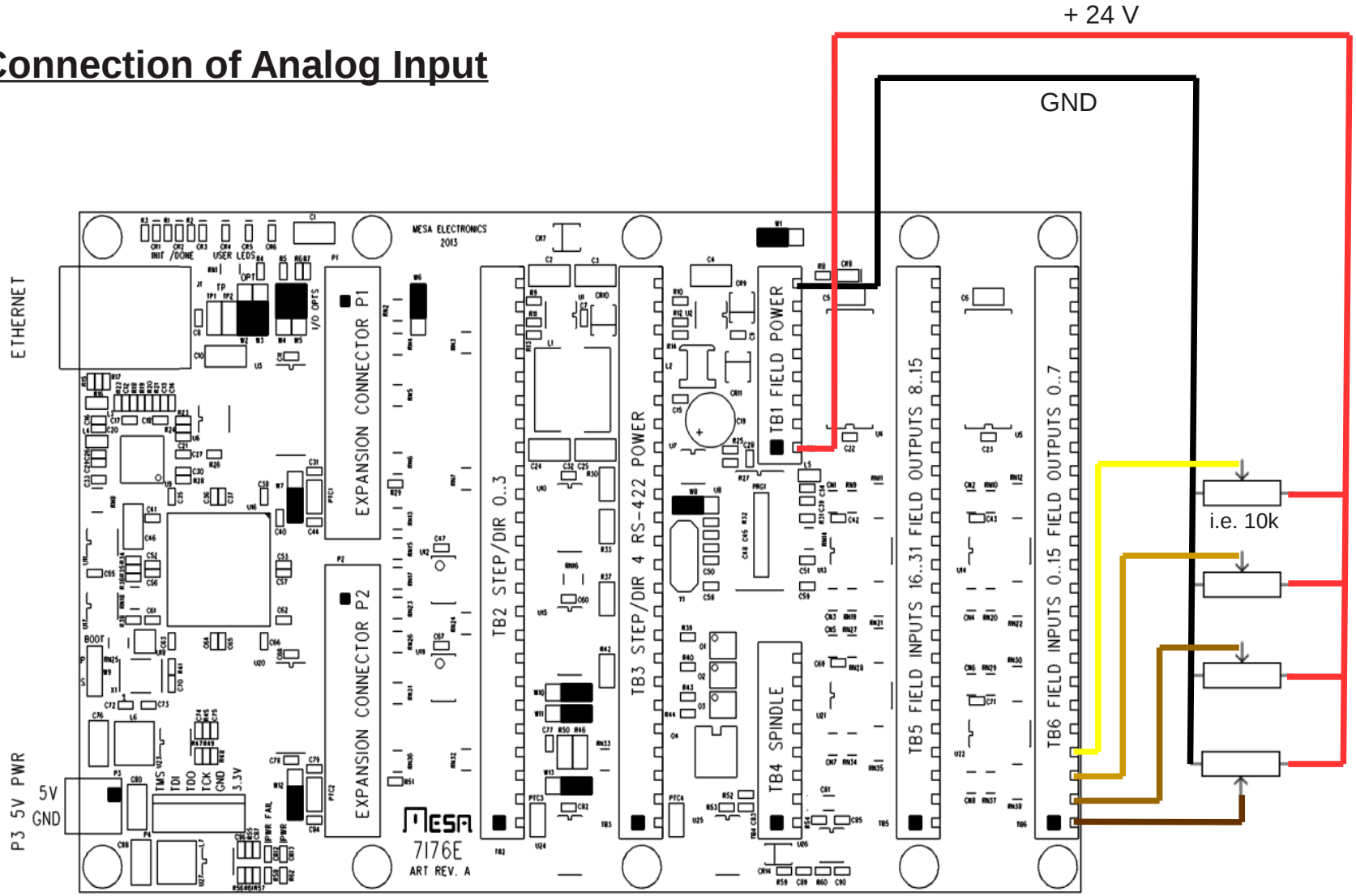

TB1 Field Power

Pin 8 : GND

Pin 1 : + 24 V

You may use also:

Pin 5 : + 24 V

Pin 4 : + 24 V

Pin 3 : + 24 V

Pin 2 : + 24 V

as power source or get GND and +24 V directly from the powersupply.

TB6 : Analog in

PIN 4 = hm2_7i76e.0.7i76.0.0.analogin3

PIN 3 = hm2_7i76e.0.7i76.0.0.analogin2

PIN 2 = hm2_7i76e.0.7i76.0.0.analogin1

PIN 1 = hm2_7i76e.0.7i76.0.0.analogin0

Connection of Digital Input

TB1 Field Power
Pin 2 : + 24 V

You may use:
Pin 5 : + 24 V
Pin 4 : + 24 V
Pin 3 : + 24 V
Pin 1 : + 24 V

as power source or
get it directly from
the power supply.

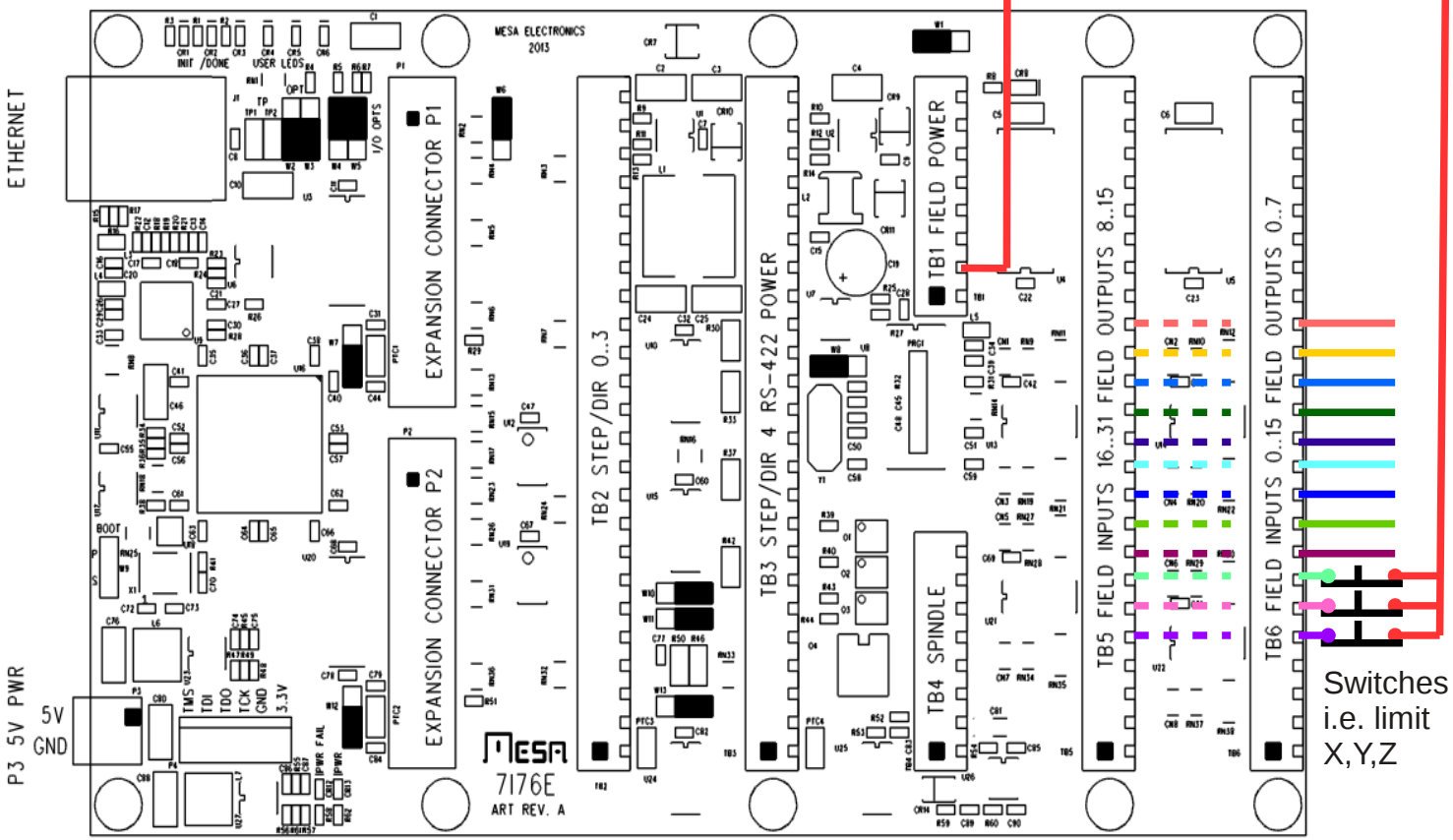

TB6 : Digital in
PIN 16 = hm2_7i76e.0.7i76.0.0.input-15
PIN 15 = hm2_7i76e.0.7i76.0.0.input-14
PIN 14 = hm2_7i76e.0.7i76.0.0.input-13
PIN 13 = hm2_7i76e.0.7i76.0.0.input-12
PIN 12 = hm2_7i76e.0.7i76.0.0.input-11
PIN 11 = hm2_7i76e.0.7i76.0.0.input-10
PIN 10 = hm2_7i76e.0.7i76.0.0.input-09
PIN 9 = hm2_7i76e.0.7i76.0.0.input-08
PIN 8 = hm2_7i76e.0.7i76.0.0.input-07
PIN 7 = hm2_7i76e.0.7i76.0.0.input-06
PIN 6 = hm2_7i76e.0.7i76.0.0.input-05
PIN 5 = hm2_7i76e.0.7i76.0.0.input-04

Do not use
hm2_7i76e.0.7i76.0.0.input-03
hm2_7i76e.0.7i76.0.0.input-02
hm2_7i76e.0.7i76.0.0.input-01
hm2_7i76e.0.7i76.0.0.input-00
As they are used as analog input

TB5 : Digital in
PIN 16 = hm2_7i76e.0.7i76.0.0.input-31
PIN 15 = hm2_7i76e.0.7i76.0.0.input-30
PIN 14 = hm2_7i76e.0.7i76.0.0.input-29
PIN 13 = hm2_7i76e.0.7i76.0.0.input-28
PIN 12 = hm2_7i76e.0.7i76.0.0.input-27
PIN 11 = hm2_7i76e.0.7i76.0.0.input-26
PIN 10 = hm2_7i76e.0.7i76.0.0.input-25
PIN 9 = hm2_7i76e.0.7i76.0.0.input-24
PIN 8 = hm2_7i76e.0.7i76.0.0.input-23
PIN 7 = hm2_7i76e.0.7i76.0.0.input-22
PIN 6 = hm2_7i76e.0.7i76.0.0.input-21
PIN 5 = hm2_7i76e.0.7i76.0.0.input-20

Do not use
hm2_7i76e.0.7i76.0.0.input-19
hm2_7i76e.0.7i76.0.0.input-18
hm2_7i76e.0.7i76.0.0.input-17
hm2_7i76e.0.7i76.0.0.input-16
As they are used as MPG input

Connection of inductive proximity sensors

TB1 Field Power
Pin 2 : + 24 V

You may use:
Pin 5 : + 24 V
Pin 4 : + 24 V
Pin 3 : + 24 V
Pin 1 : + 24 V

as power source or get it directly from the power supply.

TB5 : Digital in
PIN Names see previous page

TB6 : Digital in
PIN Names see previous page

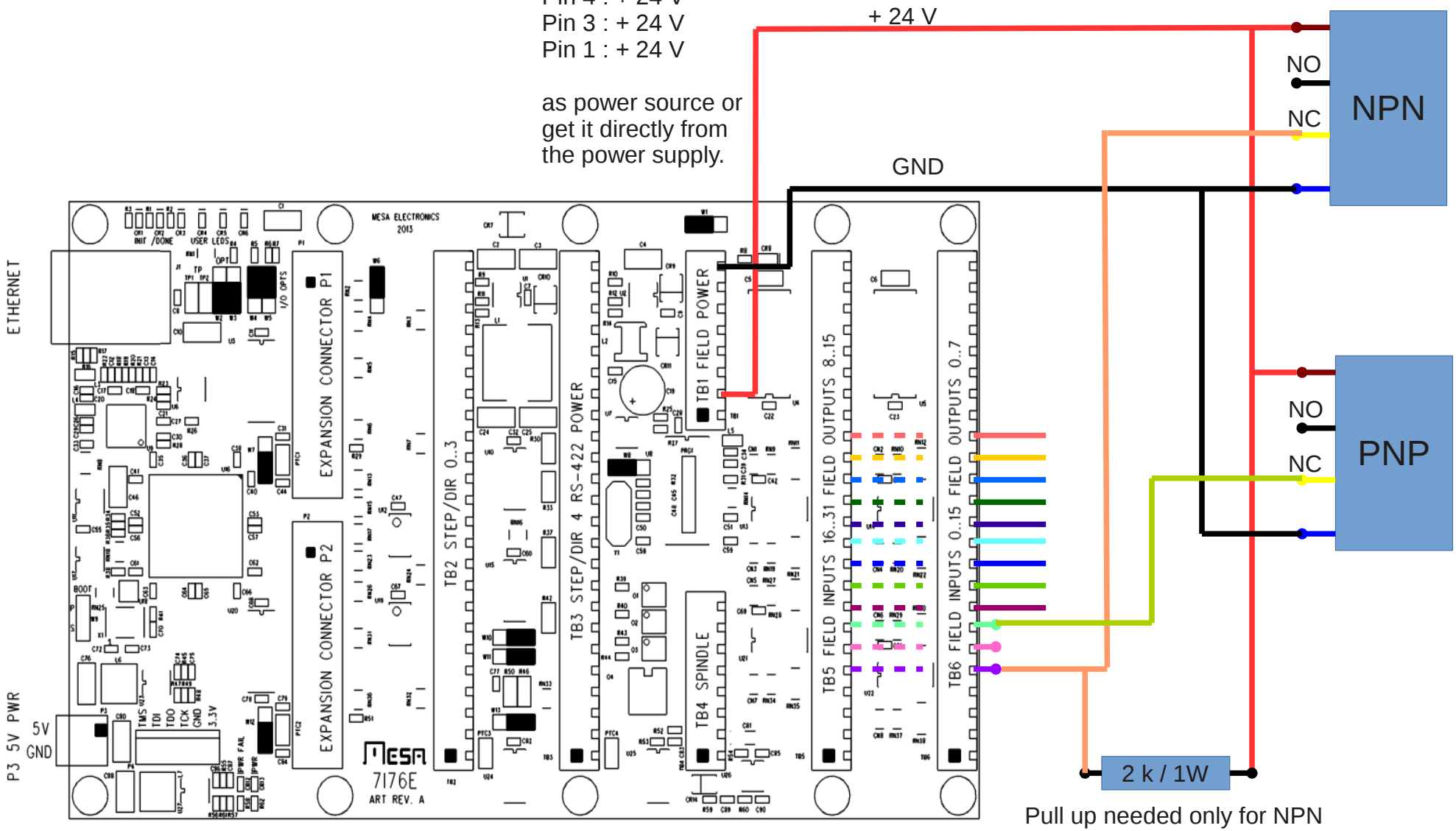

Pull up needed only for NPN
Better use PNP!

Connection of Digital Output

TB1 Field Power
Pin 8 : GND
Or get GND directly
from the power supply.

Important note:
Maximum output load per pin is 350 mA
Total output is limited to 2A.

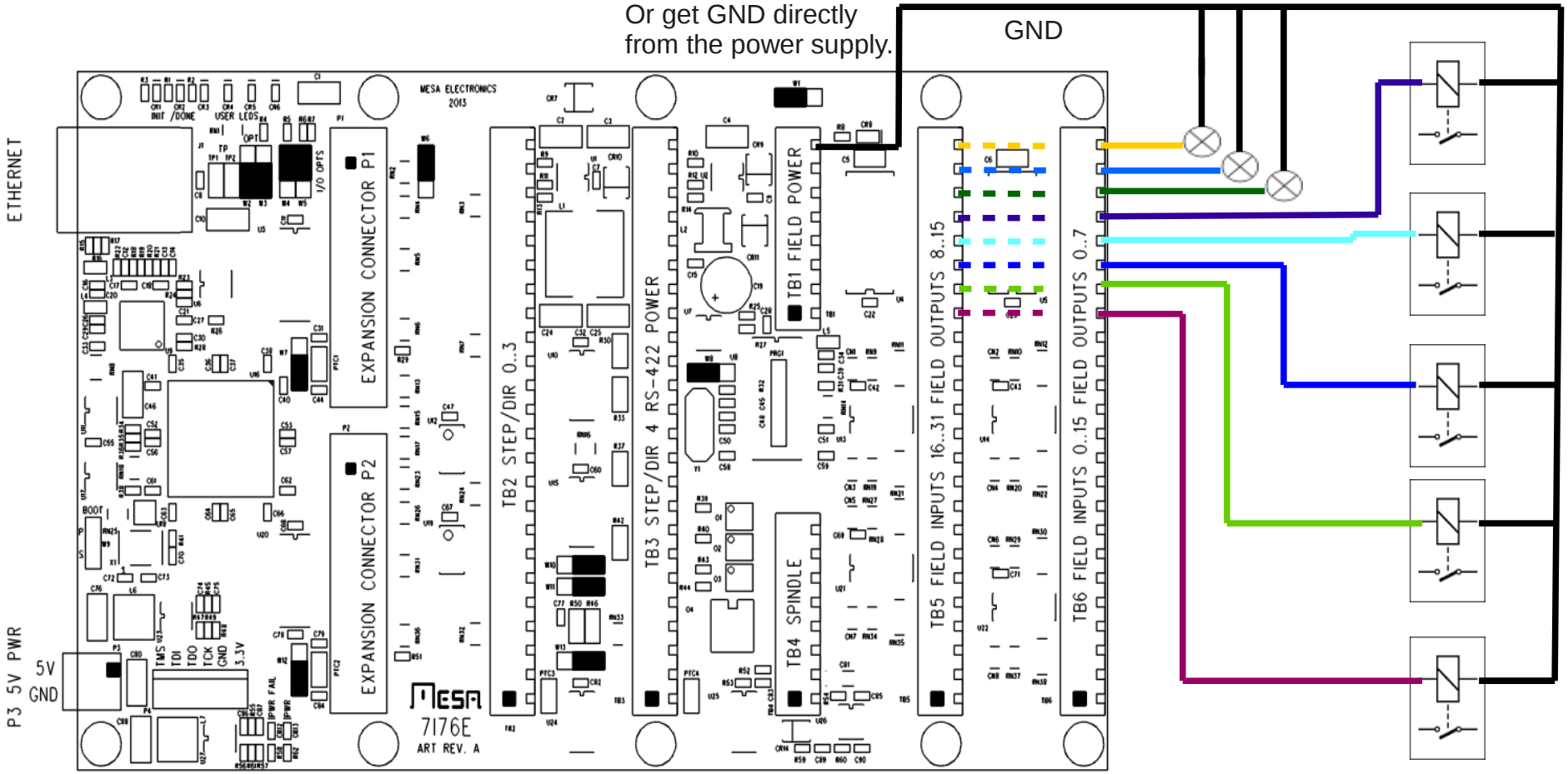

TB5 : Digital out

PIN 24 = hm2_7i76e.0.7i76.0.0.output-15
PIN 23 = hm2_7i76e.0.7i76.0.0.output-14
PIN 22 = hm2_7i76e.0.7i76.0.0.output-13
PIN 21 = hm2_7i76e.0.7i76.0.0.output-12
PIN 20 = hm2_7i76e.0.7i76.0.0.output-11
PIN 19 = hm2_7i76e.0.7i76.0.0.output-10
PIN 18 = hm2_7i76e.0.7i76.0.0.output-09
PIN 17 = hm2_7i76e.0.7i76.0.0.output-08

TB6 : Digital out

PIN 24 = hm2_7i76e.0.7i76.0.0.output-07
PIN 23 = hm2_7i76e.0.7i76.0.0.output-06
PIN 22 = hm2_7i76e.0.7i76.0.0.output-05
PIN 21 = hm2_7i76e.0.7i76.0.0.output-04
PIN 20 = hm2_7i76e.0.7i76.0.0.output-03
PIN 19 = hm2_7i76e.0.7i76.0.0.output-02
PIN 18 = hm2_7i76e.0.7i76.0.0.output-01
PIN 17 = hm2_7i76e.0.7i76.0.0.output-00

Connection of MPG's

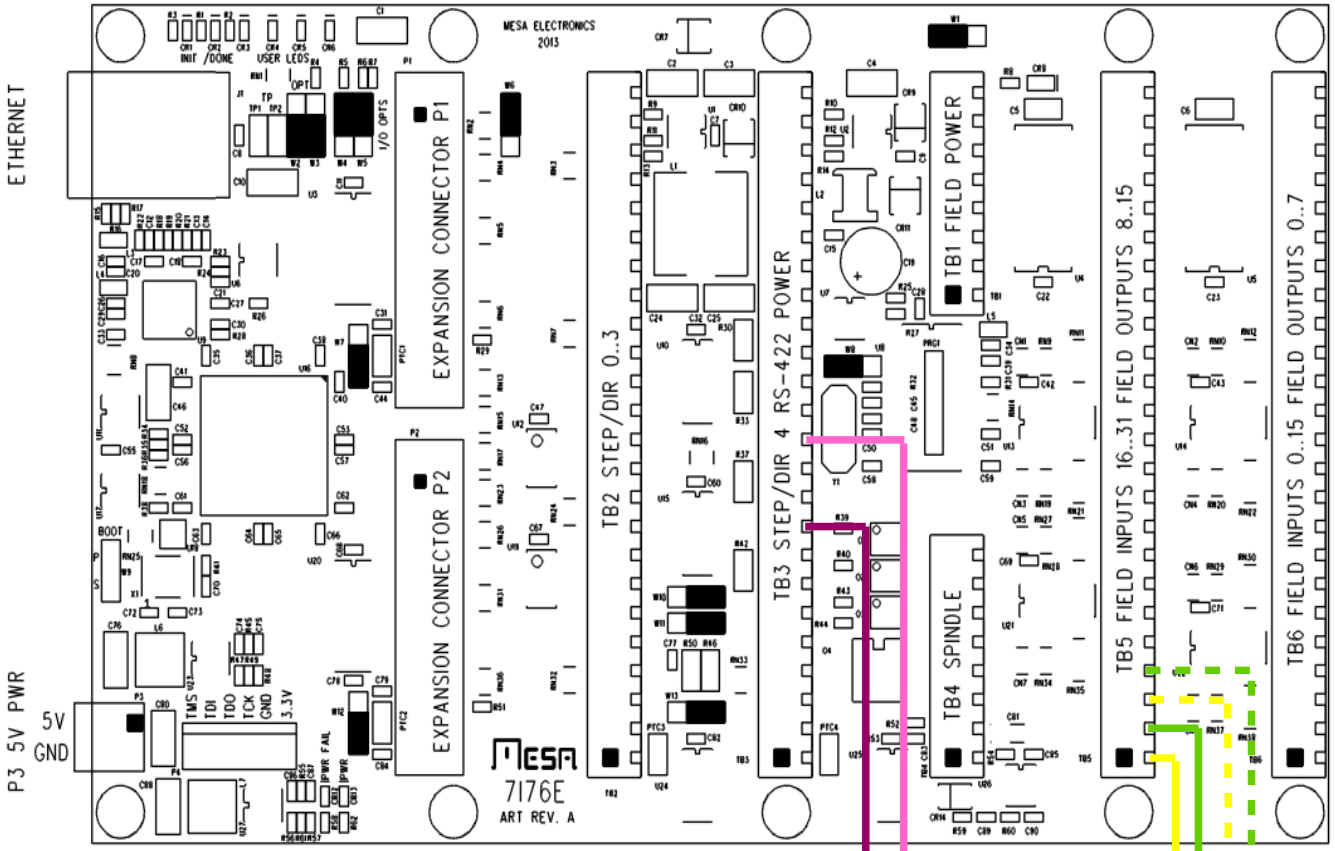

TB5 : MPG in

- PIN 4 = MPG 1 Signal B
- PIN 3 = MPG 1 Signal A
- PIN 2 = MPG 0 Signal B
- PIN 1 = MPG 0 Signal A

TB3 : MPG Power

- PIN 12 = MPG + 5V
- PIN 9 = MPG GND

Power could also be taken from other pin
i.E. TB3 Pin 1 and PIN 6

hm2_7i76e.0.7i76.0.0.enc1.count

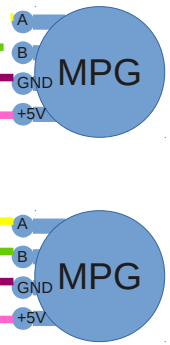

hm2_7i76e.0.7i76.0.0.enc0.count

Connection of Steppers

Note:
Not used pins can not be used as IO Pin,
even if not all stepper are used

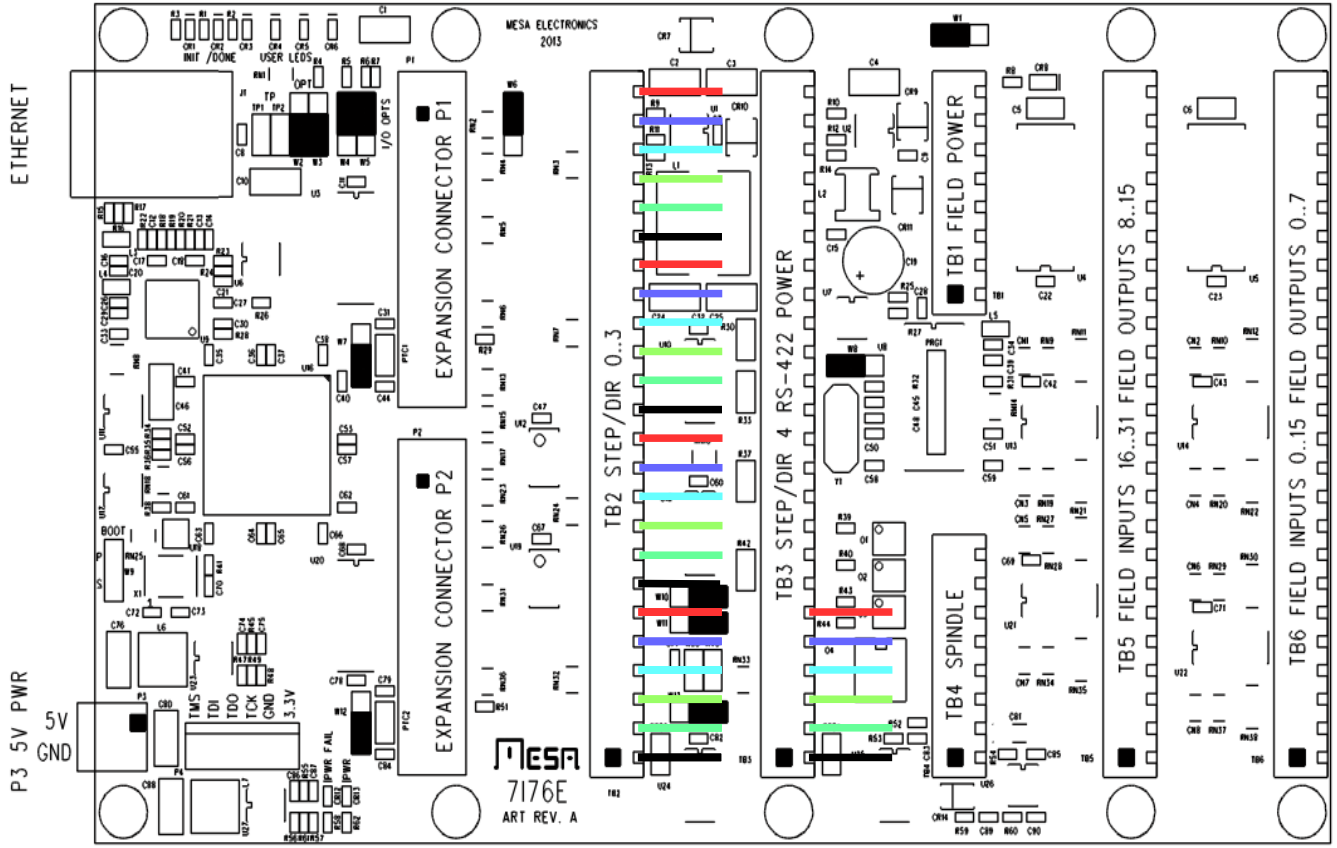

	Type 0	Type2
	+ 5 V	+ 5 V
	DIR +	A
	DIR -	A-
	STEP +	B
	STEP -	B-
	GND	GND

setp hm2_7i76e.0.stepgen.00.step_type 0

Sets the type to be used:
Type 0 = step/dir
Type 1 = up/down
Type 2 = quadratur A/B
Type 3 = Three phase full step
Etc.

See „man stepgen“ for all details

TB2 : Stepper in

PIN 24 = + 5V : Stepper 3
PIN 23 = DIR+ : Stepper 3
PIN 22 = DIR- : Stepper 3
PIN 21 = STEP+ : Stepper 3
PIN 20 = STEP - : Stepper 3
PIN 19 = GND : Stepper 3

PIN 18 = + 5V : Stepper 2
PIN 17 = DIR+ : Stepper 2
PIN 16 = DIR- : Stepper 2
PIN 15 = STEP+ : Stepper 2
PIN 14 = STEP - : Stepper 2
PIN 13 = GND : Stepper 2

PIN 12 = + 5V : Stepper 1
PIN 11 = DIR+ : Stepper 1
PIN 10 = DIR- : Stepper 1
PIN 9 = STEP+ : Stepper 1
PIN 8 = STEP - : Stepper 1
PIN 7 = GND : Stepper 1

PIN 6 = + 5V : Stepper 0
PIN 5 = DIR+ : Stepper 0
PIN 4 = DIR- : Stepper 0
PIN 3 = STEP+ : Stepper 0
PIN 2 = STEP - : Stepper 0
PIN 1 = GND : Stepper 0

TB3 : Stepper in

PIN 6 = + 5V : Stepper 4
PIN 5 = DIR+ : Stepper 4
PIN 4 = DIR- : Stepper 4
PIN 3 = STEP+ : Stepper 4
PIN 2 = STEP - : Stepper 4
PIN 1 = GND : Stepper 4

Connection of Spindle

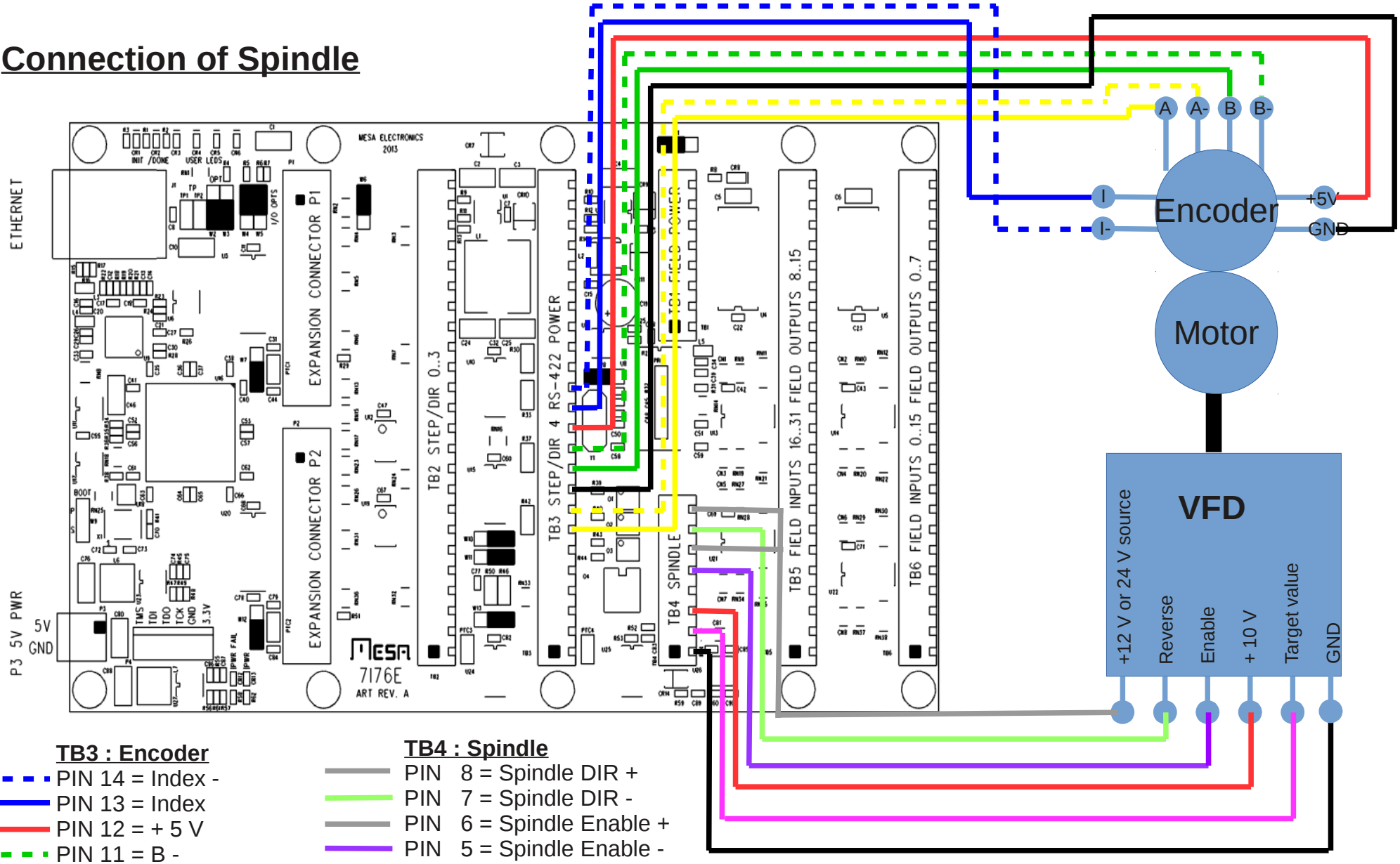

TB3 : Encoder

- PIN 14 = Index -
- PIN 13 = Index
- PIN 12 = + 5 V
- PIN 11 = B -
- PIN 10 = B
- PIN 9 = GND
- PIN 8 = A-
- PIN 7 = A

TB4 : Spindle

- PIN 8 = Spindle DIR +
- PIN 7 = Spindle DIR -
- PIN 6 = Spindle Enable +
- PIN 5 = Spindle Enable -
- PIN 4 = not connected
- PIN 3 = Spindle +
- PIN 2 = Spindle OUT
- PIN 1 = Spindle -

hm2_7i76e.0.7i76.0.0.spindir
hm2_7i76e.0.7i76.0.0.spinena
hm2_7i76e.0.7i76.0.0.spinout