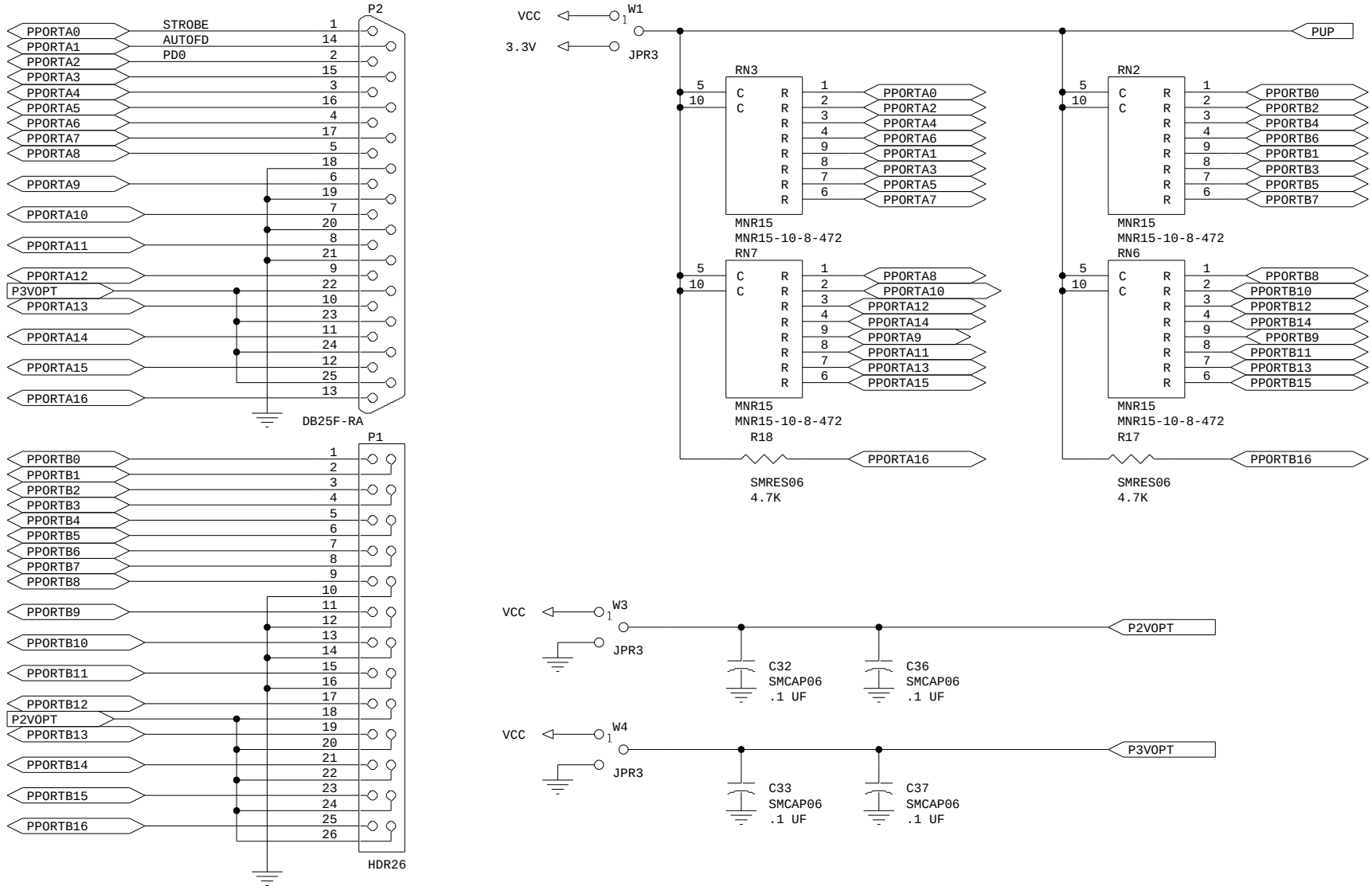

MESA ELECTRONICS

Title	7I92 I/O CONNECTORS AND PULLUPS	
Size A	Document Number	REV
Date: June 19, 2015	Sheet 5 of 5	